

Rear Elevation



Side Elevation



Side Elevation

SQUARE FOOTAGE

MAIN FLOOR	2447 SF
UPPER FLOOR	1327 SF
LOWER	1312 SF
TOTAL	5086 SF
GARAGE	897 SF
PORCH/DECK	1409 SF

DRAWING INDEX

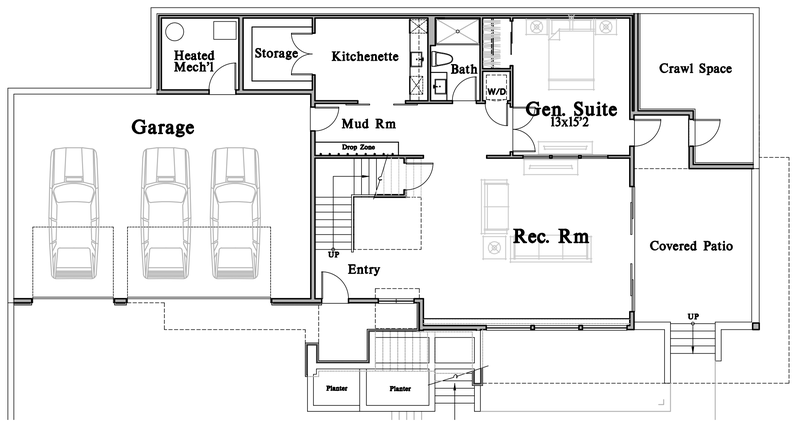
A1. CODE NOTES
A1.1. SITE PLAN
CV-01 COVER SHEET
TP-01 TESC, DRAINAGE & TREE RETENTION
TP-02 TESC NOTES & DETAILS
SP-01 SITE PLAN
DT-01 SITE DETAILS
SURVEY
A2. LOWER FLOOR PLAN
A3. MAIN FLOOR PLAN
A4. UPPER FLOOR PLAN
A5. ROOF PLAN
A6. ELEVATIONS
A7. ELEVATIONS/ENERGY
A8. SECTIONS & DETAILS
S-0.0. STRUCTURAL NOTES
S-1.0 FOUNDATION PLAN
S-1.1 MAIN FLOOR FRAMING
S-2.0 UPPER FLOOR FRAMING
S-3.0 ROOF FRAMING
SD-1 FOUNDATION DETAILS
SD-2 STRUCTURAL DETAILS
SD-3 STRUCTURAL DETAILS
SD-4 STRUCTURAL DETAILS



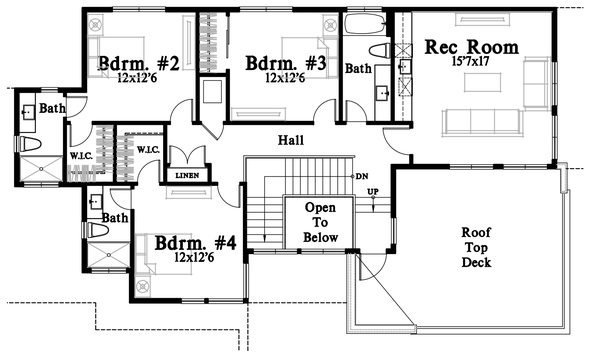
Buchan Homes

Westview Plan

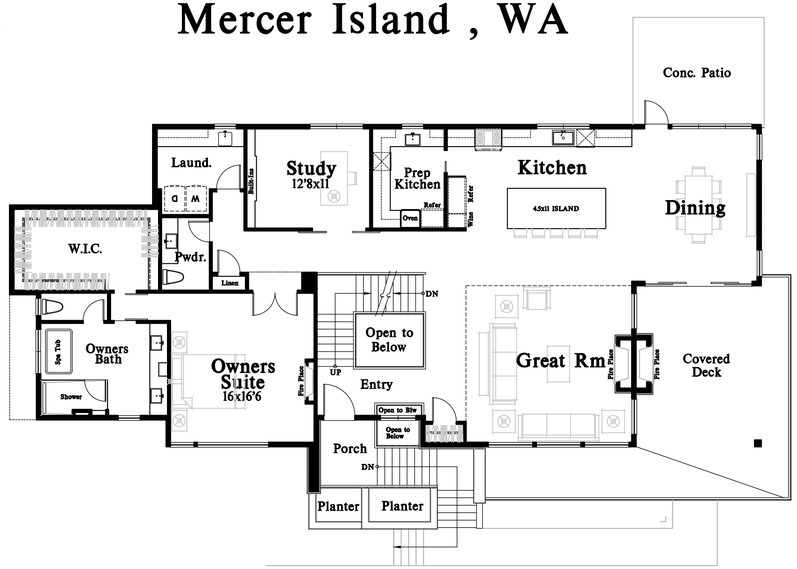
3036 67th Ave SE Mercer Island , WA



Lower Floor Plan



Upper Floor Plan



Main Floor Plan

ARCHITECTURAL INNOVATIONS, P.S.
Forward Thinking Design Solutions For Your Environment
14311 SE 16th St
Bellevue, WA 98007
1-800-888-4517
www.kaparchitecturalinnovations.com

Date	By	Description
10/12/22	REV	PERMIT SET

Buchan Homes
Westview Plan
3036 67th Ave SE Mercer Island , WA

THIS DRAWING IS ©COPYRIGHTED ARCHITECTURAL INNOVATIONS, P.S. ALL RIGHTS RESERVED

REGISTERED ARCHITECT STATE OF WASHINGTON
ORIGINAL SIGNATURE REQUIRED

TITLE

JOB NO. : 21076.05
STARTING NO. : 21076.03

SHEET

COVER SHEET

Division 1
GENERAL REQUIREMENTS

Ø1000 GENERAL

1. This coversheet has been prepared in a generic outline form following the standards set by the Construction Standards Institute (CSI). It is for the convenience of the Contractor/Owner. This outline is intended to work with a material selection list following the (CSI) format. Not all items are necessarily required to complete this specific project. Coordinate with Contractor/Owner for complete listing of specifications. Within this coversheet it will state, 'Coordinate with materials finish selection schedule'.

2. These drawings are copyrighted. ARCHITECTURAL INNOVATIONS P.S. retains all rights, ownership and copyright of this design under the federal copyright act. Reproductions of illustrations or working drawings in any form is by authorization of ARCHITECTURAL INNOVATIONS P.S. only.

3. Authorized reproductions must bear the name of ARCHITECTURAL INNOVATIONS P.S.

4. Construction/working drawings by their very nature are diagrammatic and do not purport to show all details or conditions of construction. Questions generally arise to the architectural/design intent and to construction technical detailing within these drawings. As clarifications, interpretations, and revisions are all part of the construction process, ARCHITECTURAL INNOVATIONS P.S., therefore shall not be liable for any direct, indirect, or consequential damages as a result of not participating in the construction process.

5. Do not vary or modify the work shown, except with written instruction from ARCHITECTURAL INNOVATIONS P.S. Report discrepancies and/or omissions to the architect immediately.

6. Due to the nature of construction and the building process there will be bidder design and Contractor/Owner selection of the building products, components, and assemblies. This set of working drawings is considered a 'builder set' and does not include specifications or building materials list. Therefore it is the Contractor/Owners responsibility to provide and coordinate specifications, including product selection and installation or assembly. ARCHITECTURAL INNOVATIONS P.S. assumes no liability or responsibility for discrepancies or conflicts which occur through Contractor/Owner specified materials and their respective installation. ARCHITECTURAL INNOVATIONS P.S. assumes no liability or responsibility for any items, which may be called out or referred to by manufacturer as brand name. Items called out are done so for convenience only.

7. Do not scale these drawings for critical dimensions. Verify all dimensions and datum's before commencing work and be responsible for their accuracy. Report discrepancies and/or omissions to the architect immediately.

8. The Contractor/Owner is responsible for coordinating work with all trades to ensure proper and adequate interface of all trade works. The contractor shall be responsible for all required safety precautions and procedures required to do this work.

9. Except as specifically defined otherwise, interpretation for all definitions, abbreviations, and supplemental definitions shall follow accepted referenced standards.

10. All work within this contract shall represent that of industry standards for the respective trades in the location in which the project is built.

All references to I.R.C, I.B.C, and W.S.E.C are references to the 2018 code updates & WA state Amendments.

Ø1001 MISCELLANEOUS ASSEMBLY REQUIREMENTS

1. Provide crawl space access, minimum 18" x 24" unobstructed access through the floor, 16" x 24" through perimeter walls and below grade access, per I.R.C. section R408.4. Insulate and weather-strip per W.S.E.C R402.2.4. Allow 18" minimum space under wood joists and 12" minimum space under wood girders.
2. Provide attic access, minimum 22" x 30" with 30" minimum headroom, at unobstructed readily accessible opening per I.R.C. section R807.1. Insulate and weather-strip per W.S.E.C R402.2.4. requirements.
3. Provide ventilation per I.R.C. as follows:
   A) Crawl space ventilation: Minimum net area shall be not less than 1 s.f. per 300 s.f. under floor area. Required openings shall be evenly placed to provide cross ventilation of the space except one side of the building shall be permitted to have no ventilation openings per section R408.2.
   B) Attic ventilation: Minimum net area shall be not less than 1 s.f. per 150 s.f. of attic area or 1 s.f. per 300 s.f. of attic area if at least 40 percent, and not more than 50 percent, of the required ventilating area is provided by ventilators located in the upper portion of the space to be ventilated, and is no more than 3 feet below the ridge or highest point of the space. The balance of required ventilation to be provided by eave or cornice vents per I.R.C. section R806.2 and W.S.E.C. requirements.
4. Slope all decks, walks, driveways, exterior door landings, and patios away from building. Minimum 1/4" per foot.
5. Provide approved numbers or addresses in such a position as to be plainly visible and legible from the street or road fronting the property per I.R.C. section R319.1.
6. Garage/House separation:
   A) Garage ceilings separating attic spaces shall be protected with 1/2" GWB. When garages are beneath habitable rooms, the ceilings shall be covered with 5/8" type 'x' GWB on the garage side. Where the separation is a floor/ceiling assembly, the structure shall be protected with 1/2" GWB, per I.R.C. table R302.6.
   B) Door between garage and house shall be a self closing solid wood core, honeycomb core steel, or 20-minute fire rated door having a minimum thickness of 1-3/8" per I.R.C. section R302.5.1.
   C) Ducts in the garage and ducts penetrating the walls or ceilings separating the dwelling from the garage shall be constructed of a minimum No. 26 gage sheet steel or other approved material and shall have not openings into the garage per I.R.C. R302.5.2.
   D) Garage floor shall slope to facilitate the movement of liquids to a drain or toward the main vehicle entry doorway.
7. Stair assembly:
   A) Minimum headroom height 6'-8" per I.R.C. section R311.7.2.
   B) Minimum stair tread depth 10" with a 36" minimum width, measured above handrail height. Maximum riser height 7-3/4" per I.R.C. sections R311.7.5
   C) Top of handrail shall be 34" minimum and 38" maximum above tread nosing and not less than 1-1/2" from the wall. Return rail ends to wall per I.R.C. section R311.7.8.
   D) Install fire blocking between stringers at the top and bottom of each run per I.R.C. section R302.11.
   E) Cover usable space under stairs with 1/2" GWB per I.R.C. section R302.7.
8. Laundry Chutes & Dumbsaiter Shafts - provide 5/8" type 'x' GWB or 26 gage sheet metal with lock joints on all openings to shaft surfaces shall be self closing solid core door 1-3/8".
9. Fireblocking shall be provided in wood-frame construction in the following locations:
   A) In concealed spaces of stud walls and partitions, including furred spaces and parallel rows of studs or staggered studs, as follows:
      1. Vertically at the ceiling and floor levels.
      2. Horizontally at intervals not exceeding 10 feet.
   B) At all interconnection between concealed vertical and horizontal spaces such as occur at soffits, drop ceilings and cove ceilings.
   C) In concealed spaces between stair stringers at the top and bottom of the run. Enclosed spaces under stairs shall comply with Section R302.7.
   D) At openings around vents, pipes, ducts, cables and wires at ceiling and floor level, with and approved material to resist the free passage of flame and products of combustion.
   E) For the fireblocking of chimneys and fireplaces, see Section R1003.19.
   F) Fireblocking of cornices of a two-family dwelling is required at the line of dwelling unit separation.
10. Fireblocking shall consist of the following materials per I.R.C. R302.11.
   A) 2" nominal lumber.
   B) Two thickness of 1" nominal lumber with broken lap joints.
   C) One thickness of 23/32" wood structural panels with joints backed by 23/32" wood structural panels.
   D) One thickness of 3/4" particleboard with joints backed by 3/4" particleboard.
   E) One 1/2" gypsum board.
   F) One 1/4" cement-based millboard.
   G) Batts or blankets of mineral wool or glass fiber or other approved materials installed in such a manner as to be securely retained in place.
11. Structural design criteria: These notes are provided for convenience only and do not imply that complete structural analysis has been done on this structure.
   A) Truss Loading: (U.NO.)
      Top chord live load: 25psf
      Top chord dead load: 7psf
      (15 psf, if tile)
      Bottom chord live load: 10psf without storage
      20psf if limited storage
      30psf if sleeping room
      TOTAL LOAD: 42psf
      or 52psf
      or 67psf
   B) Roof live load: 25 psf (U.NO.)
   C) Floor live load: 40 psf (U.NO.) Deck Live Load 60 psf U.NO.
   D) Stair and corridor live load: 40 psf
   E) Mechanical units: weights provided by manufacturer
   F) Wind: 110 mph (U.NO.)
   G) Seismic Design Category: D(2) (U.NO.)
   H) Allowable soil pressure: Unless a soils report by a qualified engineer is provided, all footings and foundations shall be on assumed 1500 psf bearing capacity unless otherwise noted on drawing.
   J) Equivalent fluid pressure 35 pcf. (U.NO.)
   K) All footings to be located below the frost line depth 18" (U.NO.)

Ø1002 MISCELLANEOUS ASSEMBLY REQUIREMENTS CONT.

12. Prefabricated Fireplaces and Solid Fuel Burning Appliances per I.M.C. and I.R.C. Chapter 10:
   A) Solid fuel burning appliances include airtight stoves, fireplace stoves, room heaters/fireplace stoves, factory built fireplaces, and fireplace inserts, and all shall comply with the provisions of I.M.C.
   B) Metal Chimneys shall be enclosed above the story in which the appliance served is located, in walls having one hour fire resistance rating, and with a space on all sides between chimney and enclosing walls sufficient for examination and repair for entire chimney. Walls shall be without openings per I.M.C.
   C) Provide fireblocking at chimney per I.R.C. section R302.11.
   D) Install metal fireplace with hearth and surrounds per manufacturers specifications.
   E) Prefabricated fireplaces, chimneys, and related components to bear U.L. or ICBO seal of approval and be installed per manufacturers requirements.
13. Fireblocking per I.R.C. section R302.11.

Ø1060 REGULATORY REQUIREMENTS

1. All construction shall conform to the 2018 International Residential Code (I.R.C.), 2018 International Building Code (I.B.C.), 2018 International Fire Code (I.F.C.), 2018 International Mechanical Code (I.M.C.) 2018 Uniform Plumbing Code (U.P.C.), 2018 Washington State Energy Code (W.S.E.C.) and be in accordance with all State Laws and Regulations and various codes imposed by jurisdictional requirements and local authorities.
2. Arrange inspections that are mandatory due to jurisdictional requirements.

Ø1500 CONSTRUCTION FACILITIES AND TEMPORARY CONTROLS

1. Provide Temporary Facilities - including electricity, water, and temporary toilet, per jurisdictional requirements.
2. Provide Contemporary Controls - including erosion sediment and surface water control and entrapment during construction per jurisdictional requirements.

END DIVISION 1

Division 2
SITE WORK

Ø7200 EARTHWORK

Part 3 - Execution
1. Rough grading: 4" below finish grading unless otherwise specified.
2. Finish grading: Landscaping division Ø7300.
3. Excavation, backfilling, and compacting for structures as needed.
4. Excavation, backfilling, and compacting for pavement as needed.
5. Hauling and disposal of excavated material as needed.
6. Importing of material as needed.
7. Rock removal as needed.

Ø7500 PAVING AND SURFACING

Part 2 - Product
1. Walk, road, and parking paving:
   A. Asphalt 2", class B, over 3" crushed rock or 2" ATB.
   B. Crushed rock 5/8" minus.
   C. Concrete per Division 3:
      1. Finish and color:
         Coordinate with materials finish selection schedule.
2. Unit Pavers: 1. Coordinate with materials finish selection schedule.
3. Pavement marking: 1. Coordinate with materials finish selection schedule.

Ø7100 SEWAGE AND DRAINAGE

Part 2 - Product
1. Subdrainage systems:
   A. Foundation drainage 4" SDR 35 or sched. 40 rigid PVC perforated pipe embedded in pea gravel or clean crushed rock and wrapped in filter fabric.
2. Storm sewage systems:
   A. Exterior catch basins, grates, and frames:
      1. Coordinate with materials finish selection schedule.
   B. Culverts:
      1. Coordinate with materials finish selection schedule.
   C. Drain pipe: 4" ADS non-perforated tight line.
3. Sanitary sewage systems:
   A. Sewage collection lines 8" PVC unless cast iron is noted.
   B. Septic system: Per drawings of bidders designer.

Part 3 - Execution
1. Subdrainage system:
   A. Slope to drain and surround in well draining material per details.
2. Surface drainage per I.R.C. section R403.3.

Ø1800 SITE IMPROVEMENTS

Part 2 - Product
1. Irrigation system: Bidder design
   1. Coordinate with materials finish selection schedule.
2. Fences and gates:
   1. Coordinate with materials finish selection schedule.

Ø7300 LANDSCAPING

Part 2 - Product
Bidder Design

END DIVISION 2

Division 3
CONCRETE

Ø3100 CONCRETE FORMWORK

Part 3 - Execution
1. Formwork and bracing for structural cast-in place concrete shall be by subcontractor and meet the requirements of the drawings and industry standards.
2. All formwork shall be placed in such a manner as to allow cast-in place concrete to be placed on solid substrate and to allow structural support members to sit below the frost line.

Ø3200 CONCRETE REINFORCING

Part 2 - Product
1. Reinforcing steel: Deformed bar sizes and locations per plans and details. Grade 60, F_y = 60ksi per I.R.C. section R404.1.3.3.7.1. Unless otherwise noted per Engineer.
2. Welded wire fabric: at locations per plans and details: 6x6, W1.4xW1.4MF.

Part 3 - Execution
1. A minimum lap for all bars shall be 40 diameters taken from the smallest bar. Provide corner bars to match horizontal reinforcement. Minimum coverage per details and I.R.C. section R402.4.1.3.3.7.4.

Ø3250 CONCRETE ACCESSORIES

Part 2 - Product
1. Anchor bolts: 1/2"ø triple zinc ZMAX (G185 per ASTM A653) hot dipped galvanized steel (ASTM 153 for Anchors), with a minimum 1" embedment, per I.R.C. section R403.1.6., unless otherwise noted per Engineer.
2. Washers: 3"X3"X1/4" sq. triple zinc ZMAX (G185 per ASTM A653) hot dipped galv. steel (ASTM 153 for Fasteners), plate washers per I.R.C. section R602.11.1. Unless otherwise noted per Engineer.

Part 3 - Execution
1. Anchor bolts at 6'-0" o.c. max. for one story & 4'-0" o.c. for buildings over two stories in height, 12" from corners and joints, with a minimum embedment of 7". Provide a minimum of (2) bolts per plate section per I.R.C. section R403.1.6.

Ø3300 CAST-IN-PLACE CONCRETE

Part 2 - Product
1. Structural concrete: Design f'c = 2500 psi min 5-1/2 sacks of cement per cubic yard of concrete and a maximum of 6.0 gallons of water per 94lb sack of cement at 28 days. Max slump is 4", segregation of materials to be prevented. Use f'c = 3000 psi concrete at 28 days with air entrainment only for concrete exposed to weather, in accordance with I.R.C. Table R402.2. Special inspection not required unless noted otherwise per Engineer.
2. Architectural concrete: for exposed aggregate finish (washed), f'c = 3000 psi at 28 days, with 3/8" round aggregate.

Ø3300 CAST-IN-PLACE CONCRETE (cont.)

3. Admixtures:
   A. All concrete shall have water reducing admixtures except for footings.
   B. Air entrainment shall be 5-7% in all concrete exposed to weather, I.R.C. Table R402.2
   C. Coloring agent:
      1. Coordinate with materials finish selection schedule.

Part 3 - Execution

END DIVISION 3

Division 4
MASONRY

Ø4100 MORTAR

Part 2 - Product
1. Type 'M' or 'S' mortar with integral waterproofing agent per I.R.C. section R606.2.7.

Part 3 - Execution
1. Per I.R.C. section R606.2

Ø4150 MASONRY ACCESSORIES

Part 2 - Product
1. Anchors and Ties: To be corrosion-resistant metal ties per I.R.C. section R703.8.4.
2. Joint reinforcement: Standard strand no. 9 U.S. gage wire per I.R.C. section R703.8.
Part 3 - Execution
1. Per I.R.C. Chapter 7.

Ø4200 UNIT MASONRY

Part 2 - Product
1. Brick veneer:
   A. Exterior locations: name/mfg:
      1. Coordinate with materials finish selection schedule (by others).
   B. Interior locations: name/mfg:
      1. Coordinate with materials finish selection schedule (by others).
   C. Pavers/planters: name/mfg:
      1. Coordinate with materials finish selection schedule (by others).
2. Concrete masonry units: grade N-1 CMU, unless otherwise indicated sizes per drawings.
   A. Special units:
      1. Coordinate with materials finish selection schedule (by others).
3. Glass masonry units: (glass block) Per I.R.C. section R610.1.
   A. Exterior locations: name/mfg:
      1. Coordinate with materials finish selection schedule (by others).
   B. Interior locations: name/mfg:
      1. Coordinate with materials finish selection schedule (by others).

Part 3 Execution
1. Brick and Veneer:
   A. Brick veneer shall be supported on footings, foundation, or other non-combustible supports. It shall have 15# felt backing and No. 9 gauge, non corrosive ties at 1 per each 2 s.f. of veneer. Provide 1" minimum air space between veneer and backing. Provide approved flashing at base of veneer with 3/16" min. round weepholes at 33" o.c. max., located immediately above the flashing, extending from the air space to the exterior. Veneer shall support no load other than its own weight and the vertical dead load of veneer above. Provide angle iron support at doors, windows, and other openings per R606.10.
2. Concrete unit: (U.NO.)
   A. Concrete masonry unit walls shall be constructed to conform to ASTM C90. It shall be laid up, reinforced, and anchored as shown on drawings.

Ø4400 STONE

Part 2 - Product
1. As shown on drawings.
   A. Exterior locations: name/mfg:
      1. Coordinate with materials finish selection schedule (by others).
   B. Interior locations: name/mfg:
      1. Coordinate with materials finish selection schedule (by others).

Part 3 Execution
1. Stone Veneer: Adhered per manufacturer's installation instructions and in accordance with I.R.C. R703.12.1
   A. On exterior stud walls, adhered masonry veneer shall be installed:
      1. Minimum of 4 inches above the earth.
      2. Minimum of 2 inches above paved areas, or
      3. Minimum of 1/2 inch above exterior walking surfaces which are supported by the same foundation that supports the exterior wall.
   B. Flashing at foundation:
      1. A corrosion-resistant screed or flashing of a minimum 0.019-inch or 26-gage galvanized or plastic with a minimum vertical attachment flange of 3½ inches shall be installed.

END DIVISION 4

DIVISION 5
METALS

Ø5050 METAL FASTENINGS

Part 2 - Product
1. Bolts: Use sizes and shapes per dwgs, or as needed for intended purposes. Bolts, nuts and cut washers in contact with treated wood to be triple zinc ZMAX (G185 per ASTM A653) hot dipped galvanized steel (ASTM 153 for Anchors).

Ø5100 METAL FABRICATION

Part 2 - Product
1. Handrails and guardrails: Provide in sizes and locations as shown per dwg.

END DIVISION 5

Division 6
WOOD AND PLASTICS

Ø6100 ROUGH CARPENTRY

Part 2 - Product
1. Framing Lumber: Framing lumber shall be marked in conformance with the United States Dept. of Commerce, Standard Reference No. PS 20 (DOC PS 20) standards. All Kiln dried minimum 15%.
   A. Joist and rafters: (2x6 and larger) Hem-Fir #2 or better.
   B. Beams and stringers: (4x and larger) Doug-Fir #2 or better.
   C. Post and timbers: Doug-Fir #1.
   D. Studs, plates, and misc. light framing: Hem-Fir #2 or better.
   E. * I * Joists and Engineered beams: Per manufacturer.
   F. Glue laminated beam:
      1. Simple span: 24F - V4 DF/SP
      2. Continuous or cantilever: 24F - V8 DF/DF
   G. All outdoor lumber: Hem-Fir Standard or better.
   H. Plywood/oriented strand board (OSB): APA graded.
   I. Wall sheathing: see 'TYPICAL BUILDING MATERIALS' list on the dwgs.
   J. Floor sheathing: see 'TYPICAL BUILDING MATERIALS LIST'on the dwg.
   K. Other: As noted on drawings.
   L. All wood members in contact with exposed concrete to be pressure treated members.
2. Particle Board:
   A. Underlayment:
      1. Floors: 5/8" (U.NO.)
      2. Sheet vinyl: 1/4" (U.NO.) see division 9
   B. Cabinet surfaces 3/4" (U.NO.)
3. Trusses:
   A. Prefabricated connector plate wood roof trusses shall be designed and stamped by the manufacturer in accordance with the 'design specification for metal plate connected wood trusses'. Design drawings and details to be available upon request.
   B. See 'Roof Framing Notes' on drawings.
   C. Roof design, layout, loading, and bracing shall be by manufacturer.
   D. Field alterations of truss must be designed by manufacturer.
4. Fasteners and adhesives: All nails shall be common wire of sizes for intended purpose per I.R.C. table R602.3(1). Attach timber joists to flush headers and beams with Simpson 'U' hanger series or equal to suit intended purpose. Simpson connectors at other locations as outlined per drawings. Bolt heads, nuts, and cut washers per Division 5. Connectors and fasteners in contact with treated wood to be triple zinc ZMAX (G185 per ASTM A653) hot dipped galv. steel (ASTM 153 for Fasteners), stainless steel, silicone bronze, or copper as required per dwgs.
5. Post to not footing connection. Provide pressure treated post and positive connection to footing per I.R.C. section R403.1.
6. All exposed glue laminated wood, if not protected by a roof or eave, must be preservative-treated.

Part 3 - Execution
1. The following will apply unless shown on drawings. All wood framing details shall be constructed to the minimum standards in the I.R.C. All framing shall conform to the requirements of Chapters 5,6, and 8 of the I.R.C. Minimum nailing shall conform to table R602.3(1) of the I.R.C. Height and spacing of studs shall conform to table R602.3(5) of the I.R.C.

Ø6200 FINISH CARPENTRY

Part 2 - Product
1. Cabinets:
   A. Coordinate with materials finish selection schedule (by others).
2. Millwork and casing:
   A. Coordinate with materials finish selection schedule (by others).
3. Paneling:
   A. Coordinate with materials finish selection schedule (by others).
4. Stair and handrail by:
   A. Coordinate with materials finish selection schedule (by others).
   B. See division Ø6100.1 misc. assembly requirements.
5. Bookcases and built-in shelves:
   A. Coordinate with materials finish selection schedule (by others).
6. Plastic laminate and solid surface material:
   A. Coordinate with materials finish selection schedule (by others).

END DIVISION 6

Division 7
THERMAL AND MOISTURE PROTECTION

Ø7150 WATER PROOFING & DAMP PROOFING

Part 2 - Product
1. Per I.R.C. section R406.

Part 3 - Execution
1. Per I.R.C. section R406.

Ø7190 VAPOR AND AIR RETARDER

Part 2 - Product
1. Ground cover: 6 mil polyethylene: black, with 12" minimum lap.
2. Building wrap: see the 'TYPICAL BUILDING MATERIALS' list on the drawings.

Part 3 - Execution
1. See Division 11, Energy Requirements.

Ø7200 INSULATION

Part 2 - Product
1. Fiberglass or mineral wood batts, bloom mineral wool, and extruded polystyrene:
   A. Walls: 1. See the 'TYPICAL BUILDING MATERIALS' list on the dwgs.
   B. Ceiling: 1. See the 'TYPICAL BUILDING MATERIALS' list on the dwgs.
   C. Floor: 1. See the 'TYPICAL BUILDING MATERIALS' list on the dwgs.
   D. Slab on Grade: R-10 (per W.S.E.C. Table R402.1.1).
2. Insulating Foam: A. Standard sealant foam.

Part 3 - Execution
1. See division 11: energy requirements
2. Provide insulation markers for blown-in or sprayed insulation every 300 sq ft. Markers shall face the attic access per IECC Sec 303.1.1)
3. Crawl Space/Cantilevered floors: Insulation shall be installed to maintain permanent contact with the underside of the sub-floor decking. Insulation supports shall be installed so spacing is no more than 24" on center. Cantilevered floor vents shall be placed below the lower surface of the floor insulation.

Ø7300 ROOFING MATERIAL

Part 2 - Product
1. Shingles and roofing tiles:
   A. See the 'TYPICAL BUILDING MATERIALS' list on the drawings
2. Membrane roofing: A. 3-ply hot mopped.

Part 3 - Execution
1. Install per manufacturer's recommendation and Chapter 9 of the I.R.C.

Ø7460 SIDING MATERIAL

Part 2 - Product
1. Siding: A. See the 'TYPICAL BUILDING MATERIALS' list on the drawings.
2. Trim: A. See the 'TYPICAL BUILDING MATERIALS' list on the drawings.
3. Soffits: A. See the 'TYPICAL BUILDING MATERIALS' list on the drawings.
4. Other: A. See the 'TYPICAL BUILDING MATERIALS' list on the drawings.

Part 3 - Execution
1. Install per manufacturer's recommendation and Chapter 7 of the I.R.C.

Ø7600 FLASHING AND SHEET METAL

Part 2 - Product
1. Min. 26 Gauge galvanized, prefinished.

Part 3 - Execution
1. Install per Chapter 7 and 9 of the I.R.C.
   A) Flashing against a vertical sidewall shall be by the step-flashing method. The flashing shall be a minimum of 4" high and 4" wide. At the end of the vertical sidewall the step flashing shall be turned out in a manner that directs water away from the wall and onto the roof and/or gutter, Per I.R.C. R903.2.1

Ø7700 ROOFING SPECIALTIES

Part 2 - Product
1. Vents:
   A. Ridge vent: manufactured by:
      1. Coordinate with materials finish selection schedule (by others).
   B. Mushroom vent: manufactured by:
      1. Coordinate with materials finish selection schedule (by others).
2. Gutters:
   A. Continuous alum. precoated:
      1. Style: K profile
      2. Color: Match fascia
3. Downspouts:
   A. 2x3 rectangular aluminum precoated:
      1. Color: Match fascia & trim
   B. Tie to 1 drain system.

Ø7800 SKYLIGHTS

Part 2 - Product
1. Skylights to conform with I.R.C. section R308.6.
2. Manufacturer: A. Coordinate with materials finish selection schedule (by others).

Ø7900 SEALANTS AND CAULKING

Part 2 - Product
1. Caulking A. Styrene butadiene caulking (SBR) 1. Color: Match siding

END DIVISION 7

Division 8
DOORS AND WINDOWS

Ø8100 WOOD DOORS (Lower Level, Main Level, Upper Level)

Part 2 - Product
1. Panel wood doors: A. Coordinate with materials finish selection schedule (by others).
2. Flush wood doors: A. Coordinate with materials finish selection schedule (by others).
3. Stile and rail/store door): A. Coordinate w/materials finish selection schedule (by others).
4. Patio door: A. Coordinate with materials finish selection schedule (by others).
5. Other: A. Coordinate with materials finish selection schedule (by others).

Ø8300 SPECIALTY DOORS

Part 2 - Product
1. Sliding glass door:
   A. Coordinate with materials finish selection schedule (by others).
2. Garage door: (take/style): (see division 1450)
   A. Coordinate with materials finish selection schedule (by others).

Ø8600 WOOD/VINYL WINDOWS

Part 2 - Product
1. Note: Egress -
   A. Every sleeping room shall have at least one operable window with a net clear opening of 5.7 s.f. The net clear opening height shall be a minimum of 24", with a minimum net clear width of 20", and a finished sill height of not more than 44" above the floor, per I.R.C. section R310.
   B. Safety glaze per I.R.C. section R308.
   C. See plans for egress and operation.
2. Manufactured by:
   A. Color: 1. Coordinate with materials finish selection schedule (by others).
   B. Style: 1. Coordinate with materials finish selection schedule (by others).

Ø8700 HARDWARE

Part 2 - Product
1. Type: A. Coordinate with materials finish selection schedule (by others).
2. Weather Stripping: A. Coordinate with materials finish selection schedule (by others).
3. Thresholds: A. Coordinate with materials finish selection schedule (by others).

Ø8800 GLAZING

Part 2 - Product
1. Glass thickness to be determined by size and wind loading per I.R.C. section R308.
2. Safety glaze per I.R.C. section R308.
3. Mirrors to be silvered 1/4" float plate glass.

END DIVISION 8

Division 9
FINISHES

Ø9250 GYPSUM WALLBOARD

Part 2 - Product
1. Walls: See the 'TYPICAL BUILDING MATERIALS' list on the drawings.
   A. Finish 1. Coordinate with Contractor/Owner material selections.
2. Ceiling: See the 'TYPICAL BUILDING MATERIALS' list on the drawings.
   A. Finish 1. Coordinate with materials finish selection schedule.
3. Wall and ceiling finishes shall have a flame spread index of not greater than 200, and a smoke-developed index of not greater than 450 per I.R.C. R302.9.
4. Code required areas:
   A. Type 'X' GWB as required.
      1. See division Ø1001 misc. assembly requirements.
   B. Waterproof GWB as req'd at wet or damp locations per I.R.C. section R702.4.2.
5. Wonderboard or durock at all tile locations (U.N.O.)
6. Metal corner bead profile:
      1. Coordinate with materials finish selection schedule.

Part 3 - Execution
1. Apply as required in I.R.C. Chapter 7 and Table R702.3.5). Nail or screw in place per table.

Ø9300 TILE

Part 2 - Product
1. Ceramic, quarry, and marble tiles:
   A. Coordinate with materials finish selection schedule (by others).

Part 3 - Execution
1. Refer to manufacturer's recommendations.

Ø9550 WOOD FLOORING

Part 2 - Products 1. Type:
   A. Coordinate with materials finish selection schedule (by others).

Ø9650 RESILIENT FLOORING

Part 2 - Products 1. Type:
   A. Coordinate with materials finish selection schedule (by others).

Ø9680 CARPETING

Part 2 - Products 1. Carpet and Pad:
   A. Coordinate with materials finish selection schedule (by others).

Ø9900 PAINTING

Part 2 - Products
1. Painting over prepared surface per manufacturer's recommendations
   A. Coordinate with materials finish selection schedule (by others).

Ø9950 WALL COVERINGS

Part 2 - Products
1. Type: A. Coordinate with materials finish selection schedule (by others).

END DIVISION 9

Division 10
SPECIALTIES

Ø1000 LOUVERS AND VENTS

Part 2 - Products
1. Hardware cloth screen 1/4" x 1/4" on soffit vents as detailed.
2. Continuous 2" perforated metal soffit vent as detailed.
3. Roof vent. (See Division Ø7100)
4. Other vents as noted per plans.

Ø1300 PREFABRICATED FIREPLACES

Part 2 - Products
1. Location/Model/Accessories:
   A. Coordinate with materials finish selection schedule (by others).

Part 3 - Execution
1. See division Ø1002.12 for misc. assembly requirements for fireplaces.

Ø1400 IDENTIFYING DEVICES

Part 2 - Products
1. Building numbers:
   A. Coordinate with materials finish selection schedule (by others).

Part 3 - Execution
1. Install in location per jurisdictional requirements.

Ø1800 TOILET AND BATH ACCESSORIES

Part 2 - Products
1. Toilet and bath accessories:
   A. Coordinate with materials finish selection schedule (by others).

Ø1900 WARDROBE AND CLOSET SPECIALTIES

Part 2 - Products
1. Storage Closet:
   A. Coordinate with materials finish selection schedule (by others).
2. Clothes Closets:
   A. Coordinate with materials finish selection schedule (by others).
3. Pantry.

END DIVISION 10

Division 11
EQUIPMENT

1610 MAINTENANCE EQUIPMENT

Part 2 - Products
1. Vacuum system:
   A. Coordinate with materials finish selection schedule (by others).

1450 RESIDENTIAL EQUIPMENT

Part 2 - Products
1. Garage door opener(s).
   A. Coordinate with materials finish selection schedule (by others).
2. Ironing board cabinet (or drawer):
   A. Coordinate with materials finish selection schedule (by others).
3. Free-standing appliances:
   A. Coordinate with materials finish selection schedule (by others).

END DIVISION 11

Division 12
FURNISHINGS

Ø5900 WINDOW TREATMENT

Part 2 - Products
1. Window treatment: A. Coordinate with materials finish selection schedule (by others).

END DIVISION 12

Division 13
SPECIAL CONSTRUCTION

1350 POOLS

Part 2 - Products 1. Bidder design

1356 HOT TUB

Part 2 - Products
1. By:
   A. Coordinate with materials finish selection schedule (by others).

END DIVISION 13

Division 14
CONVEYING SYSTEMS

1400 DUMBWAITER

Part 2 - Products
1. Dumbwaiter: A. Manufacturer/model number:
   1. Coordinate with materials finish selection schedule (by others).

END DIVISION 14

Division 15
MECHANICAL

1500 GENERAL

Part 1 - General
1. Mechanical system to be bidder design.
2. Regulatory requirements:
   A. Refer to Division 1 General Requirements.
   B. See plans for total maximum BTU.
   C. Heating and cooling equipment shall be sized based on building loads calculated in accordance with ACCA manual J or other approved heating and cooling calculation methodologies. Per M1401.3
3. Contractor work out plumbing and HVAC diagram layout.
   A. Coordinate with other trades.

1400 PLUMBING

Part 2 - Product
1. Pipes and Fittings:
   A. Waste + soil: ABS plastic of sizes req'd for the intended purpose.
      1. Provide cast iron with compression neoprene joints per locations shown on the drawings.
      2. Provide clean-outs at bends.
   B. Vents: ABS
   C. Gas: Per code, verify location of appliances.
      1. Provide an approved earthquake shutoff valve installed in the building supply line immediately after the gas meter. The valve shall be located outside of the structure and be accessible.
   D. Water Line:
      1. Below Grade: 1 1/4" type K, with hard solder
      2. Above Grade: Type L, w/soft solder
2. Plumbing equipment:
   A. Hot water heater: (Dual's in tandem)
      1. Size per U.P.C. 5th and Table 5B1 and jurisdictional amendments.
      2. Coordinate with owner's material selection (by others).
   B. Hose bib: frost proof type: Mansfield units
   C. Main shut-off valve in garage.
   D. Plumbing fixtures 1. Coordinate with owners material selection (by others).
3. Irrigation: (bidder design)
   A. Provide 1" connection in main line in garage by main shut-off valve with separate shut-off and drain valve.

1400 PLUMBING (cont.)
4. Automatic Sprinkler System: (bidder design)

Part 3 - Execution
1. The installer to design the system to appropriate jurisdictional requirements and function in a manner consistent with industry standards. Refer to general requirements.

1500 HVAC

Part 2 - Product
1. Forced Air:
   A. Furnace system:
      1. Coordinate with materials finish selection schedule (by others).
   B. Duct work and insulation:
      1. Coordinate with materials finish selection schedule (by others).
   C. Air cleaner:
      1. Coordinate with materials finish selection schedule (by others).
   D. Controls:
      1. Coordinate with materials finish selection schedule (by others).
   E. Registers with adjustable supply:
      1. Coordinate with materials finish selection schedule (by others).
   F. Provide firestopping at 'B' vent location per I.R.C. sections R302.11.
2. Fans: see division 11 energy requirements.
3. See floor plans for ukote house ventilation.
4. Vents:
   1. Coordinate with materials finish selection schedule (by others).
5. Dryer Ducts:
   A. Terminate outside building and equip with backdraft dampers per I.R.C. section M1501.3.3.
6. Dryer Ducts:
   A. Clothe Dryers shall be exhausted in accordance with manufactures instructions & I.R.C. M1502.
   B. Protective shield plates shall be placed per I.R.C. M1502.5.

Part 3 - Execution
1. The installer to design the system to appropriate jurisdictional requirements and function in a manner consistent with industry standards. Refer to general requirements.

END DIVISION 15

Division 16
ELECTRICAL

1600 GENERAL

Part 1 - General
1. Electrical systems to be bidder designed.
2. Regulatory requirements: refer to Division 1 - General Requirements.
3. Contractor to provide electrical diagramming layouts, design circuitry. follow lighting plan if provided.
   A. Coordinate with other trades.

1200 POWER

Part 2 - Product
1. Wire and Boxes.
   A. Volts: 12 & 4/3 Wire
      1. GFI = Damp Locations
   B. Low voltage: standard type
2. Panels: Circuit breaker box fully labeled
   A. Capacity Bidder Design
   B. Circuitry Bidder Design
3. Grounding:
   A. Provide (1) 2 1/2" schedule 80 PVC conduit at concrete stem wall for electrical service and (1) 5/8" diameter x 8'0" long galvanized rod (4 Ulter ground) for electrical grounding.
4. Smoke Detectors:
   A. Provide and install per I.R.C. section R314.
5. Fire alarm:
   A. Provide and install per N.E.C. and as required by governing fire marshal.

Part 3 - Execution
1. The installer to design the system to appropriate jurisdictional requirements and function in a manner consistent with the industry standards. Refer to general requirements and I.R.C.

1200 COMMUNICATIONS

Part 2 - Product
1. Intrusion alarm and security detection systems:
   A. Coordinate with materials finish selection schedule (by others).
2. Phone system:
   A. Coordinate with materials finish selection schedule (by others).
3. Intercommunication systems:
   A. Coordinate with materials finish selection schedule (by others).
4. Stereo system:
   A. Coordinate with materials finish selection schedule (by others).

1650
LIGHTING

Part 2 - Product
1. Fixtures: 1. Coordinate with materials finish selection schedule (by others).
Note: A minimum of 90% of all luminaries shall be high efficiency per W.S.E.C. R404.1.
2. Control: A. Switches: 1. Coordinate with materials finish selection schedule.
3. Dimmers: 1. Coordinate with materials finish selection schedule (by others).
4. Boxes: 1. Coordinate with materials finish selection schedule (by others).
5. Other: 1. Coordinate with materials finish selection schedule (by others).

Part 3 - Execution
1. The installer to design the system to appropriate jurisdictional requirements and function in a manner consistent with the industry standards. Refer to general requirements.

END DIVISION 16

Division 17
ENERGY REQUIREMENTS

WASHINGTON STATE ENERGY CODE:
General Notes:
1. Per U.S.E.C. R402.4, The building Envelope shall be constructed to limit the air leakage rate not to exceed 5 air changes per hour. The results of the test shall be signed by the party conducting the test and provided to the code official (R402.4.1.2).
2. Per U.S.E.C. R403.1.1, at least one thermostat per dwelling unit shall be capable of controlling the heating and cooling system on a daily schedule.
3. Per U.S.E.C. R403.3.2, ducts, air handlers, and filter boxes shall be sealed.

REGISTERED ARCHITECT
RAY B. JOHNSON
STATE OF WASHINGTON
ORIGINAL SIGNATURE REQUIRED

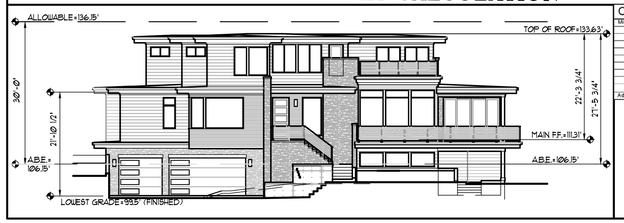
ARCHITECTURAL INNOVATIONS, P.S.
Forward Thinking Design Solutions For Your Environment
14311 SE 16th St
Bellevue, WA 98007
1-800-888-4517
www.kaplohomeplans.com

Date	By	REV	Description
10/01/22			PERMIT SET

Buchan Homes
Westview Plan
Mercer Island , WA
3036 67th Ave SE

THIS DRAWING IS

HEIGHT CALCULATION



City of Mercer Island Avg. Grade Calculations

Midpoint	Datum Elevation	F or E	Wall Segment Length		
A	+| 107.20	E	a +| 24.00	A*a	+ 2572.80
B	+| 106.00	E	b +| 16.00	B*b	+ 1728.00
C	+| 109.36	E	c +| 9.00	C*c	+ 984.25
D	+| 110.00	E	d +| 68.00	D*d	+ 7480.00
E	+| 107.80	E	e +| 36.00	E*e	+ 3880.80
F	+| 104.71	F	f +| 38.00	F*f	+ 3978.98
G	+| 99.00	F	g +| 3.00	G*g	+ 297.00
H	+| 99.00	F	h +| 46.00	H*h	+ 4554.00
	645.07		240.00		25475.82
Address	3038 61st Ave SE			106.15	AVG. GRADE

REPLACEMENT TREE IDENT.

TAG	TREE/SPECIES	NATIVE
R.1	JAPANESE MAPLE	
R.2	THUJA PLICATA	YES
R.3	VINE MAPLE	YES
R.4	THUJA PLICATA	YES
R.5	THUJA PLICATA	YES
R.6	THUJA PLICATA	YES
R.7	THUJA PLICATA	YES
R.8	DOGWOOD	YES
R.9	RED MAPLE	
R.10	VINE MAPLE	YES

8/10 NATIVE : 80% NATIVE

TREE IDENTIFICATION

TAG	TREE/SPECIES	SIZE (DBH)	RETAINED
1.	CEDAR	35.4"	NO
2.	CEDAR	30"	YES
3.	FIR	35"	YES
4.	APPLE	9.2"	NO
5.	APPLE	12.9"	NO
6.	CHERRY	6.4"	NO
7.	PLUM	10.5"	NO

TOTAL DBH = 139.4"

TOTAL RETAINED = 100.4"/47%

VICINITY MAP



SITE INFO

STREET ADDRESSES:
3036 67th AVE SE

PARCEL #:
2174501025

LEGAL DESCRIPTION:
EAST SEATTLE ADD LOTS 15 THRU 18 TGW SLY 5 FT OF LOT 19
PLAT BLOCK: 6
PLAT LOT: 15 THRU 19

ZONING

ZONING: R-8.4

SINGLE FAMILY RESIDENTIAL SETBACKS.
FRONT YARD - 20'-0"
REAR YARD - 25'
TOTAL SIDE YARD(S) - 17% OF 120'-0" = 20.4' COMBINED
INTERIOR SIDE YARD - 33% OF 20.4'= 6.73' MIN.

HEIGHT LIMIT
30' ABOVE AVERAGE BUILDING ELEVATION
35' DOWNHILL HIGHEST PLATE FROM EXISTING GRADE

LOT COVERAGE
35% MAX OF GROSS LOT AREA

G.F.A.
40% MAX. OF NET LOT AREA

SITE CALCULATIONS

LOT AREA
12,500 SF GROSS LOT AREA

G.F.A. CALCULATION
12,500 SF GROSS LOT AREA
x 40%
5,000 SF ALLOWABLE G.F.A.

2,548 SF MAIN FLOOR (see G.F.A. calculations below)
1,328 SF UPPER FLOOR (see G.F.A. calculations below)
1,124 SF LOWER FLOOR/GARAGE (see G.F.A. calculations below)
5,000 SF/40% TOTAL G.F.A.

LOT COVERAGE CALCULATION
12,500 SF GROSS LOT AREA
x 35%
4,375 SF ALLOWABLE LOT COVERAGE

3,023 SF STRUCTURE (including eaves)
344 SF COVERED PATIO/DECKS (including eaves)
666 SF DRIVEWAY (excluding portion under eaves)
4,033 SF/32% TOTAL LOT COVERAGE

HARDSCAPE SURFACE CALCULATION
12,500 SF GROSS LOT AREA
x 09%
1,125 SF ALLOWABLE HARDSCAPE COVERAGE

419 SF FRONT WALKWAY AND STEPS(excluding portion under deck)
139 SF REAR PATIO (excluding portion u/ eaves)
175 SF MAIN FLOOR DECK(excluding portion under eaves)
35 SF REAR RETAINING WALL
41 SF FRONT RETAINING WALLS
809 SF/6.5% TOTAL HARDSCAPE SURFACE AREA

LEGEND

- W — W — DESIGNATES WATER
- S — S — DESIGNATES SEWER
- SD — SD — DESIGNATES STORM
- DESIGNATES EXISTING GRADE
- DESIGNATES FINISHED GRADE
- DESIGNATES TREE DRIPLINE
- x — x — DESIGNATES TREE FENCING
- DESIGNATES EXISTING WOOD FENCE
- EXISTING FENCE TO BE REMOVED

DEMO EXISTING STRUCTURES AND HARDSCAPE

SEE ADDITIONAL STORM & UTILITY PLAN

City of Mercer Island GFA Calculations

Lower Level Area Calculation

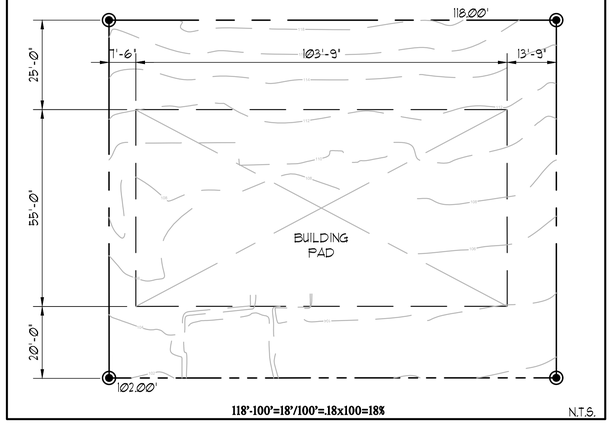
Wall	Length	Percentage	Finish or Existing	Result
A	24	68.0%	E/F	16.3
B	16	96.0%	F	15.4
C	9	100.0%	E/F	9.0
D	54	100.0%	E	54.0
E	36	26.0%	F	9.4
F	38	52.0%	E/F	19.8
G	3	0.0%	E/F	0.0
H	46	0.0%	F	0.0
	226			123.8
	Total Average Result			0.5

Flr	Sq Ft	Result		Excluded Area
	2390	0.5477876		1309.212389

Lot Size = 12,500 x 40% = 5,000 S.F.

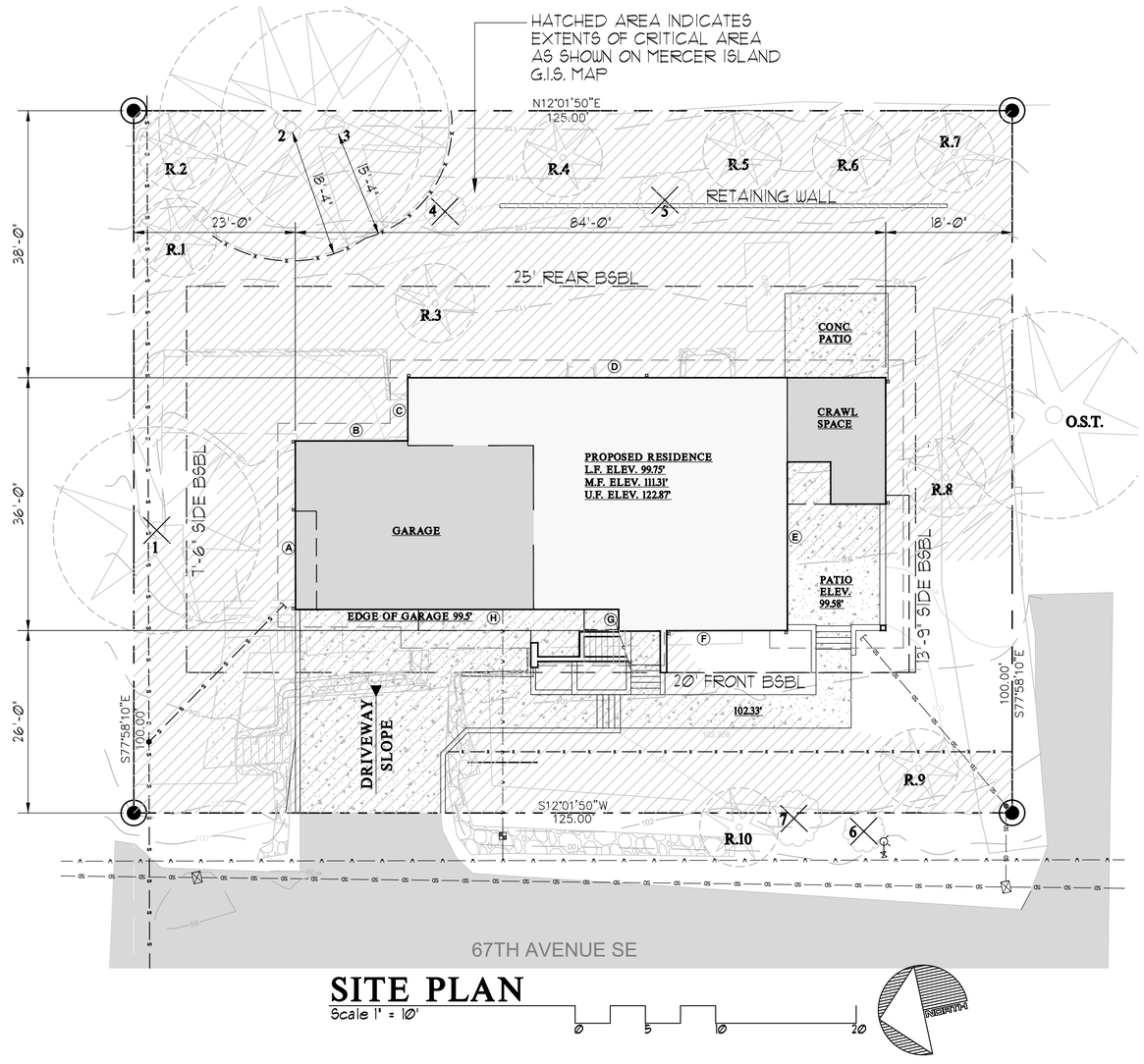
Main Floor	2548	(2504+44)	AREA >16'
Upper Floor	1328	(1405-77)	STAIRS
Lwr Flr/Gar.	1124	(2433-1309)	EXCLUDED
	5000 /40%		

LOT SLOPE CALCULATION



118'-100'=18'/100'=.18x100=18%

N.T.S.



SITE PLAN

Scale 1" = 10'

ISSUED FOR PERMIT 10/12/22
ORIGINAL SIGNATURE REQUIRED

Date	By	Description
10/12/22	REY	PERMIT SET

Buchan Homes
Westview Plan
Mercer Island , WA
3036 67th AveSE

THIS DRAWING IS ©COPYRIGHTED ARCHITECTURAL INNOVATIONS, P.S. ALL RIGHTS RESERVED

ARCHITECTURAL INNOVATIONS, P.S.
Forward Thinking Design Solutions For Your Environment
14311 SE 16th St
Bellevue, WA 98007
1-800-888-4517
www.kaprielshomeplans.com

TITLE

JOB NO.: 21076.03
STARTING NO.: START

SHEET

A1.1

SW 1/4, NW 1/4, SEC 12, TWP 24N, RNG 4E, W.M.

3036 67TH AVE SE MERCER ISLAND SITE PLAN

LEGAL DESCRIPTION

LOTS 15, 16, 17, 18 AND THE SOUTHERLY 5 FEET OF LOT 19, BLOCK 6, EAST SEATTLE, ACCORDING TO THE PLAT THEREOF RECORDED IN VOLUME 3 OF PLATS, PAGES 22 AND 23, RECORDS OF KING COUNTY, WASHINGTON; EXCEPT THAT PORTION THEREOF LYING WITHIN MERCER ISLAND ROAD (67TH AVENUE SE)

SITUATE IN THE CITY OF MERCER ISLAND, COUNTY OF KING, STATE OF WASHINGTON.

BASIS OF BEARING

RECORD OF SURVEY BY TERRANE FOR JAYMARC HOMES, RECORDED ON JULY 26, 2021, IN VOLUME 451 OF SURVEYS, PAGE 259, UNDER RECORDING NO. 20210726900027, RECORDS OF KING COUNTY, WASHINGTON.

VERTICAL DATUM & CONTROL INTERVAL

ELEVATIONS SHOWN ON THIS DRAWING WERE DERIVED FROM INFORMATION PROVIDED BY THE CITY OF MERCER ISLAND.

THE MARK IS A MONUMENT IN CASE AT THE INTERSECTION OF 68TH AVENUE SE W AND SE 32ND STREET.

POINT ID NO. 47746;
ELEVATION: 112.571 FEET – NAVD 88

2.0' CONTOUR INTERVAL – THE EXPECTED VERTICAL ACCURACY IS EQUAL TO 1/2 THE CONTOUR INTERVAL OR PLUS / MINUS 1.0' FOR THIS PROJECT.

SURVEY NOTES

1. THIS SURVEY WAS COMPLETED WITHOUT BENEFIT OF A CURRENT TITLE REPORT. EASEMENTS AND OTHER ENCUMBRANCES MAY EXIST ON THIS PROPERTY THAT ARE NOT SHOWN HEREON.
2. INSTRUMENTATION FOR THIS SURVEY WAS A 3-SECOND SPECTRAPRECISION FOCUS 35 TOTAL STATION. PROCEDURES USED IN THIS SURVEY MEET OR EXCEED STANDARDS SET BY WAC 332-130-090.
3. THE INFORMATION ON THIS MAP REPRESENTS THE RESULTS OF A SURVEY MADE IN AUGUST 2021 AND CAN ONLY BE CONSIDERED AS INDICATING THE GENERAL CONDITIONS EXISTING AT THAT TIME.
4. UTILITIES SHOWN ON THIS SURVEY ARE BASED UPON ABOVE GROUND OBSERVATIONS AND AS-BUILT PLANS WHERE AVAILABLE. ACTUAL LOCATIONS OF UNDERGROUND UTILITIES MAY VARY AND UTILITIES NOT SHOWN ON THIS SURVEY MAY EXIST ON THIS SITE.
5. ALL MONUMENTS WERE LOCATED DURING THIS SURVEY UNLESS OTHERWISE NOTED.

SITE DATA

HIGHEST ELEVATION OF LOT:	118.25	
LOWEST ELEVATION OF LOT:	98.66	
LOT SLOPE:	19.3%	
TOTAL SITE AREA:	12,500	SF
ALLOWED LOT COVERAGE:	40%	
PROPOSED LOT COVERAGE *	3,794	SF (33.7%)
PROPOSED HARDSCAPE	201	SF (1.8%)
PROJECT IMPERVIOUS AREA:	3,995	SF (35.5%)

* LOT COVERAGE INCLUDES THE COMBINATION OF BUILDINGS, INCLUDING EAVES AND ROOF OVERHANGS, AND VEHICULAR DRIVING SURFACES AS DEFINED PER MIMC 19.16.010

OWNER / ARCHITECT

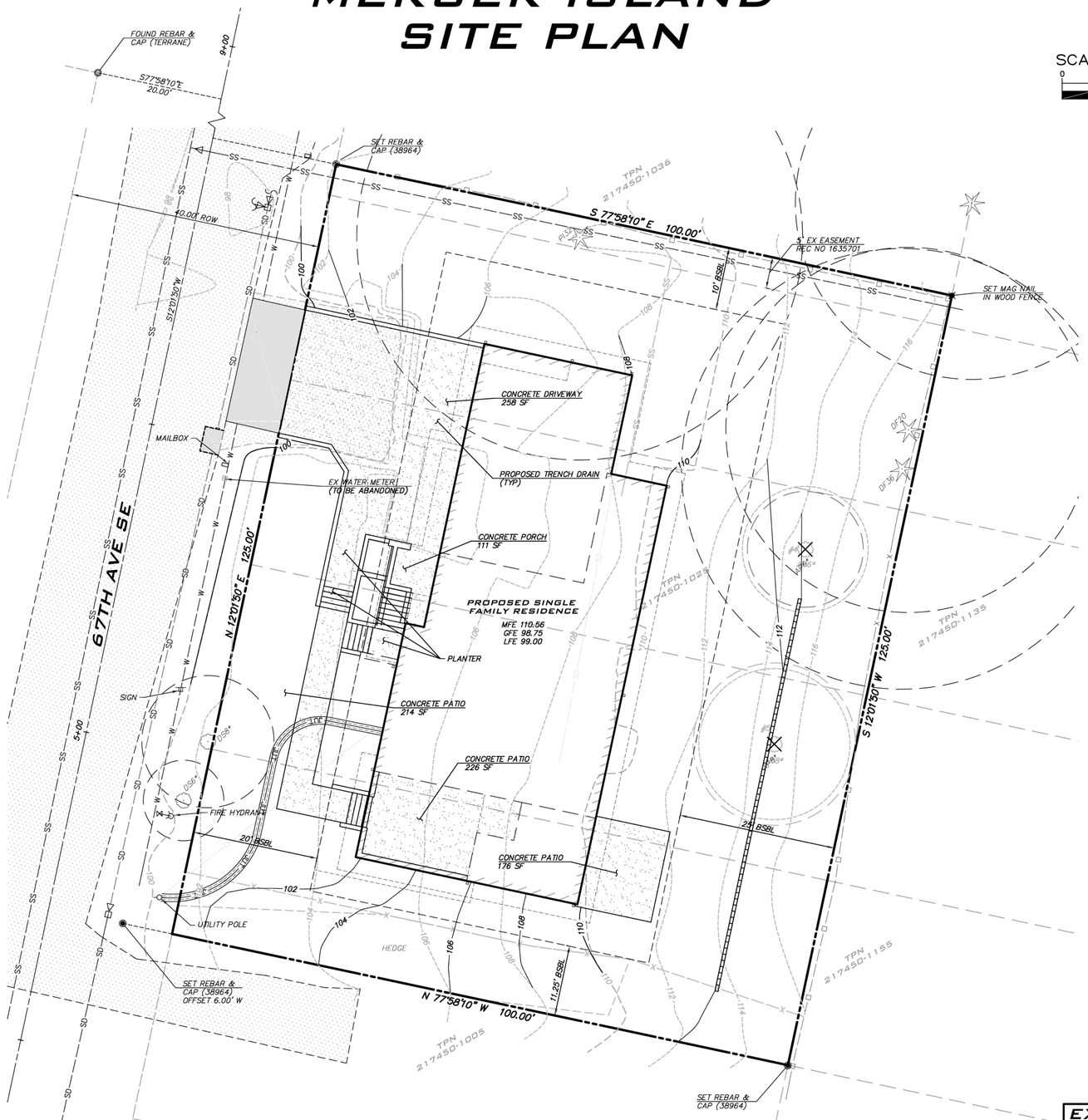
WILLIAM E. BUCHAN INC.
2630 116 AVE NE #100
BELLEVUE, WA 98004
(425) 831-5503
CONTACT: DAVID STAVE

ENGINEER

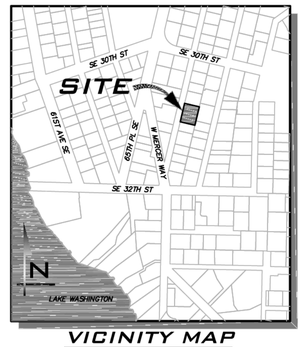
THE BLUELINE GROUP
25 CENTRAL WAY, SUITE 400
KIRKLAND, WA 98033
(425) 250-7262
CONTACT: YANNICK METS, PE

GEOTECH ENGINEER

TERRA ASSOCIATES, INC.
12220 113TH AVE NE, SUITE 130
KIRKLAND, WA 98034
(425) 821-7777
CONTACT: CAROLYN S. DECKER, PE







VICINITY MAP
NOT TO SCALE

LEGEND

PROPOSED FEATURES

- BOUNDARY
- RIGHT-OF-WAY
- LOT LINE
- SIDEWALK
- CENTER LINE
- SAWCUT
- BUILDING FOOTPRINT
- BUILDING OVERHANG
- BUILDING ROOFLINE
- BUILDING SETBACK (BSBL)
- 190 10' PROPOSED CONTOURS
- 192 2' PROPOSED CONTOURS
- MAILBOX
- ASPHALT PAVEMENT
- CONCRETE

PROPOSED STORM DRAINAGE

- STORM DRAIN PIPE
- ROOF & FOOTING DRAIN
- SWALE OR DITCH
- SURFACE FLOW
- TYPE I CB – STANDARD GRATE
- TYPE I CB – LOCKING LID
- STORM CLEANOUT
- YARD DRAIN

EXISTING FEATURES

- ADJACENT PLAT/PARCEL LINE
- ADJACENT RIGHT-OF-WAY
- CENTERLINE
- EASEMENT
- SURFACE FEATURES
- BUILDING FOOTPRINT
- 190 10' CONTOURS
- 192 2' CONTOURS
- SD STORM DRAIN PIPE
- SS SEWER MAIN
- W WATER MAIN
- OHP AERIAL POWER LINE
- G GAS MAIN
- X WIRE FENCE
- BOARD FENCE
- RETAINING WALL
- ROCKERY
- CATCH BASIN, TYPE I
- CATCH BASIN, TYPE II
- SD PIPE FLOW
- SEWER MANHOLE
- SS PIPE FLOW
- FIRE HYDRANT
- WATER METER
- GATE VALVE
- POWER POLE
- GUY ANCHOR
- STREET LIGHT
- P POWER VAULT
- POWER METER
- MAIL BOX
- EXISTING CONIFEROUS TREE
- EXISTING DECIDUOUS TREE
- DRIP LINE
- CONIFEROUS TREE TO BE SAVED
- DECIDUOUS TREE TO BE SAVED
- EXISTING CONIFEROUS TREE TO BE REMOVED
- EXISTING DECIDUOUS TREE TO BE REMOVED
- ASPHALT
- CONCRETE
- GRAVEL

TESC FEATURES

- FILTER FENCE
- CONSTRUCTION FENCE
- CLEARED AREA
- LIMITS OF CLEARING
- PIPE FLOW
- INTERIM CATCH BASIN PROTECTION (INSERT)

SHEET INDEX

1 CV-01 COVER SHEET
2 TP-01 TESC, DRAINAGE & TREE RETENTION PLAN
3 TP-02 TESC NOTES & DETAILS
4 SP-01 SITE PLAN
5 DT-01 SITE DETAILS

BUILDING CALCULATIONS

SEE ARCHITECTURAL SITE PLAN FOR TREE RETENTION, BUILDING HEIGHTS AND FAR CALCULATIONS.

EXISTING UTILITY NOTE

EXISTING UTILITIES ARE SHOWN IN THE APPROXIMATE LOCATION. THERE IS NO GUARANTEE THAT ALL UTILITY LINES ARE SHOWN, OR THAT THE LOCATION, SIZE AND MATERIAL IS ACCURATE. THE CONTRACTOR SHALL UNCOVER ALL INDICATED PIPING WHERE CROSSING, INTERFERENCES, OR CONNECTIONS OCCUR PRIOR TO TRENCHING OR EXCAVATION FOR ANY PIPE OR STRUCTURES, TO DETERMINE ACTUAL LOCATIONS, SIZE AND MATERIAL. THE CONTRACTOR SHALL MAKE THE APPROPRIATE PROVISION FOR PROTECTION OF SAID FACILITIES. THE CONTRACTOR SHALL NOTIFY ONE CALL AT 8-1-1 (WASHINGTON811.COM) AND ARRANGE FOR FIELD LOCATION OF EXISTING FACILITIES BEFORE CONSTRUCTION.

BLUELINE
25 CENTRAL WAY, SUITE 400,
KIRKLAND, WA 98033
P: 425.216.4051 F: 425.216.4052
WWW.THEBLUELINEGROUP.COM

SCALE: AS NOTED
PROJECT MANAGER: YANNICK METS, PE
PROJECT ENGINEER: ALI RAMEZANI, PE
DESIGNER: CHRISTOPHER WSCOMB
ISSUE DATE: 6/14/2022

NO	DATE	BY	REVISIONS

COVER SHEET
3036 67TH AVENUE SE
SITE PLAN
PARCEL 2174501025
CITY OF MERCER ISLAND WASHINGTON

YANNICK METS STATE OF WASHINGTON 56008 REGISTERED PROFESSIONAL ENGINEER

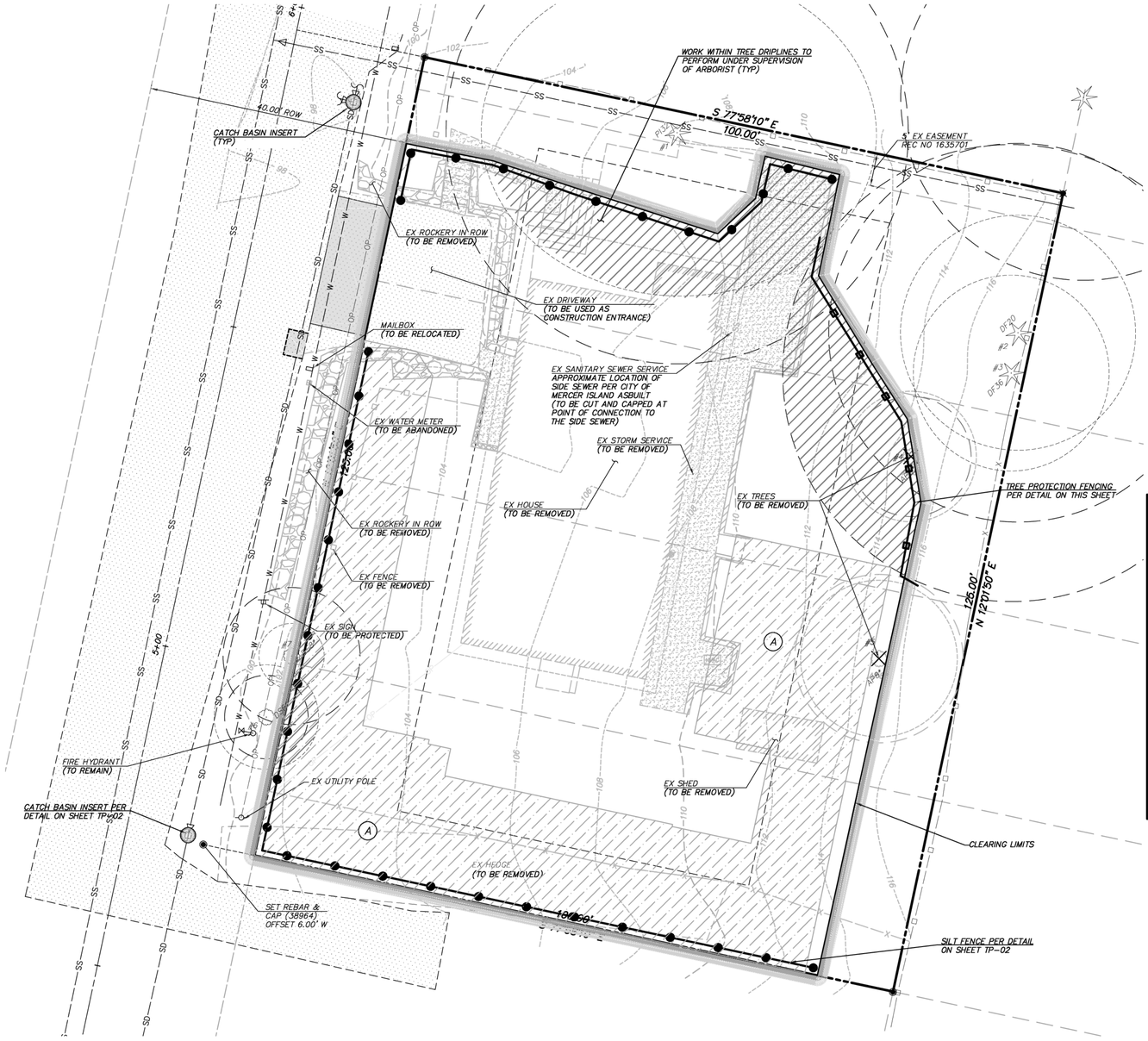
6/16/22

JOB NUMBER: 22-042
SHEET NAME: CV-01
SHT 1 OF 5

22x34
Jun 14, 2022 – 8:29am – User: cramezani
E:\Projects\22042\Dwg Sitefan\22042CV.dwg

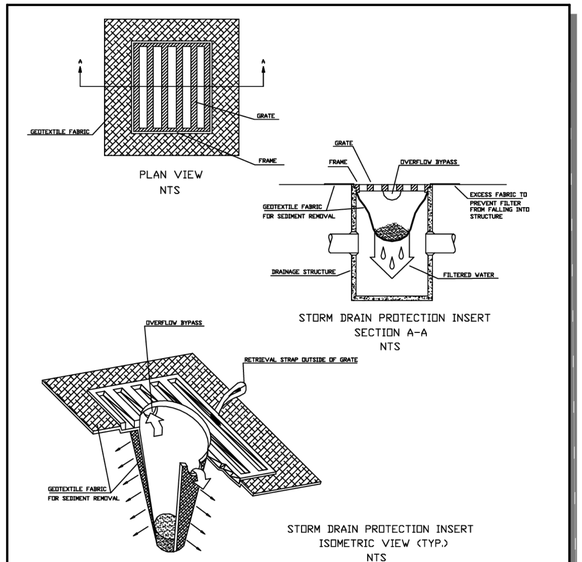
© 2022 BLUELINE

SW 1/4, NW 1/4, SEC 12, TWP 24N, RNG 4E, W.M.


WORK WITHIN TREE DRIPLINES TO PERFORM UNDER SUPERVISION OF ARBORIST (TYP)
S 77°58'10" E
100.00'
5' EX EASEMENT REC NO 1635701
40.00' ROW
CATCH BASIN INSERT (TYP)
EX ROCKERY IN ROW (TO BE REMOVED)
EX DRIVEWAY (TO BE USED AS CONSTRUCTION ENTRANCE)
MAILBOX (TO BE RELOCATED)
EX SANITARY SEWER SERVICE APPROXIMATE LOCATION OF SIDE SEWER PER CITY OF MERCER ISLAND ASBUILT (TO BE CUT AND CAPPED AT POINT OF CONNECTION TO THE SIDE SEWER)
EX WATER METER (TO BE ABANDONED)
EX STORM SERVICE (TO BE REMOVED)
EX HOUSE (TO BE REMOVED)
EX TREES (TO BE REMOVED)
TREE PROTECTION FENCING PER DETAIL ON THIS SHEET
EX ROCKERY IN ROW (TO BE REMOVED)
EX FENCE (TO BE REMOVED)
EX SIGN (TO BE PROTECTED)
N 12°01'50" E
126.00'
FIRE HYDRANT (TO REMAIN)
EX UTILITY POLE
EX SHED (TO BE REMOVED)
CATCH BASIN INSERT PER DETAIL ON SHEET TP-02
CLEARING LIMITS
EX HEDGE (TO BE REMOVED)
SET REBAR & CAP (38964) OFFSET 6.00' W
SILT FENCE PER DETAIL ON SHEET TP-02
A
A
A

TESC - PLAN NOTES

1. THE APPROVED CONSTRUCTION SEQUENCE SHALL BE AS FOLLOWS:
   A. CONDUCT PRE-CONSTRUCTION MEETING.
   B. FLAG OR FENCE CLEARING LIMITS.
   C. POST SIGN WITH NAME AND PHONE NUMBER OF TESC SUPERVISOR.
   D. INSTALL CATCH BASIN PROTECTION IF REQUIRED.
   E. GRADE AND INSTALL CONSTRUCTION ENTRANCE(S).
   F. INSTALL PERIMETER PROTECTION (SILT FENCE, BRUSH BARRIER, ETC.).
   G. CONSTRUCT SEDIMENT PONDS AND TRAPS.
   H. GRADE AND STABILIZE CONSTRUCTION ROADS.
   I. CONSTRUCT SURFACE WATER CONTROLS (INTERCEPTOR DIKES, PIPE SLOPE DRAINS, ETC.) SIMULTANEOUSLY WITH CLEARING AND GRADING FOR PROJECT DEVELOPMENT.
   J. MAINTAIN EROSION CONTROL MEASURE IN ACCORDANCE WITH CITY OF MERCER ISLAND STANDARDS AND MANUFACTURER'S RECOMMENDATIONS.
   K. RELOCATE EROSION CONTROL MEASURES OR INSTALL NEW MEASURES SO THAT AS SITE CONDITIONS CHANGE, THE EROSION AND SEDIMENT CONTROL IS ALWAYS IN ACCORDANCE WITH THE CITY TESC MINIMUM REQUIREMENTS.
   L. COVER ALL AREAS WITHIN THE SPECIFIED TIME FRAME WITH STRAW, WOOD FIBER MULCH, COMPOST, PLASTIC SHEETING, CRUSHED ROCK OR EQUIVALENT.
   M. STABILIZE ALL AREAS THAT REACH FINAL GRADE WITHIN 7 DAYS.
   N. SEED OR SOD ANY AREAS TO REMAIN UNWORKED FOR MORE THAN 30 DAYS.
   O. UPON COMPLETION OF THE PROJECT, ALL DISTURBED AREAS MUST BE STABILIZED AND BEST MANAGEMENT PRACTICES REMOVED IF APPROPRIATE.
2. APPROVAL OF THIS EROSION/SEDIMENTATION CONTROL (ESC) PLAN DOES NOT CONSTITUTE AN APPROVAL OF PERMANENT ROAD OR DRAINAGE DESIGN (E.G., SIZE AND LOCATION OF ROADS, PIPES, RESTRICTORS, CHANNELS, RETENTION FACILITIES, UTILITIES, ETC.).
3. THE IMPLEMENTATION OF THIS ESC PLAN AND THE CONSTRUCTION, MAINTENANCE, REPLACEMENT, AND UPGRADING OF THESE ESC FACILITIES IS THE RESPONSIBILITY OF THE PERMITTEE/CONTRACTOR UNTIL ALL CONSTRUCTION IS APPROVED.
4. THE BOUNDARIES OF THE CLEARING LIMITS SHOWN ON THIS PLAN SHALL BE SET BY SURVEY AND CLEARLY FLAGGED IN THE FIELD BY A CLEARING CONTROL FENCE PRIOR TO CONSTRUCTION. DURING THE CONSTRUCTION PERIOD, NO DISTURBANCE OR REMOVAL OF ANY GROUND COVER BEYOND THE FLAGGED CLEARING LIMITS SHALL BE PERMITTED. THE FLAGGING SHALL BE MAINTAINED BY THE PERMITTEE/CONTRACTOR FOR THE DURATION OF CONSTRUCTION.
5. THE TESC FACILITIES SHOWN ON THIS PLAN MUST BE CONSTRUCTED PRIOR TO OR IN CONJUNCTION WITH ALL CLEARING AND GRADING ACTIVITIES IN SUCH A MANNER AS TO ENSURE THAT SEDIMENT-LADEN WATER DOES NOT ENTER THE DRAINAGE SYSTEM OR VIOLATE APPLICABLE WATER STANDARDS. WHEREVER POSSIBLE, MAINTAIN NATURAL VEGETATION FOR SILT CONTROL.
6. THE ESC FACILITIES SHOWN ON THIS PLAN ARE THE MINIMUM REQUIREMENTS FOR ANTICIPATED SITE CONDITIONS. DURING THE CONSTRUCTION PERIOD, THESE ESC FACILITIES SHALL BE UPGRADED (E.G., ADDITIONAL SUMPS, RELOCATION OF DITCHES AND SILT FENCES, ETC.) AS NEEDED FOR UNEXPECTED STORM EVENTS. ADDITIONALLY, MORE TESC FACILITIES MAY BE REQUIRED TO ENSURE COMPLETE SILTATION CONTROL. THEREFORE, DURING THE COURSE OF CONSTRUCTION IT SHALL BE THE OBLIGATION AND RESPONSIBILITY OF THE CONTRACTOR TO ADDRESS ANY NEW CONDITIONS THAT MAY BE CREATED BY HIS ACTIVITIES AND TO PROVIDE ADDITIONAL FACILITIES OVER AND ABOVE THE MINIMUM REQUIREMENTS AS MAY BE NEEDED.
7. THE ESC FACILITIES SHALL BE INSPECTED BY THE PERMITTEE/CONTRACTOR DAILY DURING NON-RAINFALL PERIODS, EVERY HOUR (DAYLIGHT) DURING A RAINFALL EVENT, AND AT THE END OF EVERY RAINFALL, AND MAINTAINED AS NECESSARY TO ENSURE THEIR CONTINUED FUNCTIONING. IN ADDITION, TEMPORARY SILTATION PONDS AND ALL TEMPORARY SILTATION CONTROLS SHALL BE MAINTAINED IN A SATISFACTORY CONDITION UNTIL SUCH TIME THAT CLEARING AND/OR CONSTRUCTION IS COMPLETED, PERMANENT DRAINAGE FACILITIES ARE OPERATIONAL, AND THE POTENTIAL FOR EROSION HAS PASSED. WRITTEN RECORDS SHALL BE KEPT DOCUMENTING THE REVIEWS OF THE ESC FACILITIES.
8. THE ESC FACILITIES ON INACTIVE SITES SHALL BE INSPECTED AND MAINTAINED A MINIMUM OF ONCE A MONTH OR WITHIN 48 HOURS FOLLOWING A STORM EVENT.
9. ALL DENUDED SOILS MUST BE STABILIZED WITH AN APPROVED TESC METHOD (E.G. SEEDING, MULCHING, PLASTIC COVERING, CRUSHED ROCK) WITHIN THE FOLLOWING TIMELINES: APRIL 1 TO OCTOBER 31 – SOILS MUST BE STABILIZED WITHIN 7 DAYS OF GRADING. NOVEMBER 1 TO MARCH 31 – SOILS MUST BE STABILIZED WITHIN 2 DAYS OF GRADING.
10. AT NO TIME SHALL MORE THAN 1' OF SEDIMENT BE ALLOWED TO ACCUMULATE WITHIN A CATCH BASIN. ALL CATCH BASINS AND CONVEYANCE LINES SHALL BE CLEANED PRIOR TO PAVING. THE CLEANING OPERATION SHALL NOT FLUSH SEDIMENT-LADEN WATER INTO THE DOWNSTREAM SYSTEM.
11. STABILIZED CONSTRUCTION ENTRANCES SHALL BE INSTALLED AT THE BEGINNING OF CONSTRUCTION AND MAINTAINED FOR THE DURATION OF THE PROJECT. ADDITIONAL MEASURES, SUCH AS WASH PADS, MAY BE REQUIRED TO ENSURE THAT ALL PAVED AREAS ARE KEPT CLEAN FOR THE DURATION OF THE PROJECT.
12. ANY PERMANENT RETENTION/DETENTION FACILITY USED AS A TEMPORARY SETTLING BASIN SHALL BE MODIFIED WITH THE NECESSARY EROSION CONTROL MEASURES AND SHALL PROVIDE ADEQUATE STORAGE CAPACITY. IF THE PERMANENT FACILITY IS TO FUNCTION ULTIMATELY AS AN INFILTRATION OR DISPERSION SYSTEM, THE FACILITY SHALL NOT BE USED AS A TEMPORARY SETTLING BASIN. NO UNDERGROUND DETENTION TANK, DETENTION VAULT, OR SYSTEM WHICH BACKS UNDER OR INTO A POND SHALL BE USED AS A TEMPORARY SETTLING BASIN.
13. WHERE SEEDING FOR TEMPORARY EROSION CONTROL IS REQUIRED, FAST GERMINATING GRASSES SHALL BE APPLIED AT AN APPROPRIATE RATE (EXAMPLE: ANNUAL OR PERENNIAL RYE APPLIED AT APPROXIMATELY 80 POUNDS PER ACRE).
14. WHERE STRAW MULCH IS REQUIRED FOR TEMPORARY EROSION CONTROL, IT SHALL BE APPLIED AT A MINIMUM THICKNESS OF 2".
15. ALL EROSION/SEDIMENTATION CONTROL PONDS WITH A DEAD STORAGE DEPTH EXCEEDING 6" MUST HAVE A PERIMETER FENCE WITH A MINIMUM HEIGHT OF 3'.
16. ALL WORK AND MATERIALS SHALL BE IN ACCORDANCE WITH CITY OF MERCER ISLAND STANDARDS AND SPECIFICATIONS.
17. THE ESC FACILITIES SHALL BE CONSTRUCTED IN ACCORDANCE WITH THE DETAILS ON THE APPROVED PLANS. LOCATIONS MAY BE MOVED TO SUIT FIELD CONDITIONS, SUBJECT TO APPROVAL BY THE ENGINEER AND THE CITY OF MERCER ISLAND INSPECTOR.
18. A COPY OF THE APPROVED EROSION CONTROL PLANS MUST BE ON THE JOB SITE WHENEVER CONSTRUCTION IS IN PROGRESS.
19. ALL LOTS ADJOINING OR HAVING ANY NATIVE GROWTH PROTECTION EASEMENTS (NGPE) SHALL HAVE A 4' HIGH TEMPORARY CONSTRUCTION FENCE (CYCLONE OR PLASTIC MESH) SEPARATING THE LOT (OR BUILDABLE PORTIONS OF THE LOT) FROM THE AREA RESTRICTED BY THE NGPE AND SHALL BE INSTALLED PRIOR TO ANY GRADING OR CLEARING AND REMAIN IN PLACE UNTIL A DWELLING IS CONSTRUCTED AND OWNERSHIP TRANSFERRED TO THE FIRST OWNER/OCCUPANT.
20. CLEARING LIMITS SHALL BE DELINEATED WITH A CLEARING CONTROL FENCE. THE CLEARING CONTROL FENCE SHALL CONSIST OF A 6-FT. HIGH CHAIN LINK FENCE ADJACENT THE DRIP LINE OF TREES TO BE SAVED, WETLAND OR STREAM BUFFERS, AND SENSITIVE SLOPES. CLEARING CONTROL FENCES ALONG WETLAND OR STREAM BUFFERS OR UPSLOPE OF SENSITIVE SLOPES SHALL BE ACCOMPANIED BY AN EROSION CONTROL FENCE. IF APPROVED BY THE CITY, A FOUR-FOOT HIGH ORANGE MESH CLEARING CONTROL FENCE MAY BE USED TO DELINEATE CLEARING LIMITS IN ALL OTHER AREAS.
21. OFF-SITE STREETS MUST BE KEPT CLEAN AT ALL TIMES. IF DIRT IS DEPOSITED ON THE PUBLIC STREET SYSTEM, THE STREET SHALL BE IMMEDIATELY CLEANED WITH POWER SWEEPER OR OTHER EQUIPMENT. ALL VEHICLES SHALL LEAVE THE SITE BY WAY OF THE CONSTRUCTION ENTRANCE AND SHALL BE CLEANED OF ALL DIRT THAT WOULD BE DEPOSITED ON THE PUBLIC STREETS.
22. ANY CATCH BASINS COLLECTING RUNOFF FROM THE SITE, WHETHER THEY ARE ON OR OFF THE SITE, SHALL HAVE THEIR GRATES COVERED WITH FILTER FABRIC DURING CONSTRUCTION. CATCH BASINS DIRECTLY DOWNSTREAM OF THE CONSTRUCTION ENTRANCE OR ANY OTHER CATCH BASIN AS DETERMINED BY THE CITY INSPECTOR SHALL BE PROTECTED WITH A "FILTER FABRIC SOCK" OR EQUIVALENT.
23. THE WASHED GRAVEL BACKFILL ADJACENT TO THE FILTER FABRIC FENCE SHALL BE REPLACED AND THE FILTER FABRIC CLEANED IF IT IS NONFUNCTIONAL BY EXCESSIVE SILT ACCUMULATION AS DETERMINED BY THE CITY OF MERCER ISLAND. ALSO, ALL INTERCEPTOR SWALES SHALL BE CLEANED IF SILT ACCUMULATION EXCEEDS ONE-QUARTER DEPTH.
24. ROCK FOR EROSION PROTECTION OF ROADWAY DITCHES, WHERE REQUIRED, MUST BE OF SOUND QUARRY ROCK, PLACED TO A DEPTH OF 1' AND MUST MEET THE FOLLOWING SPECIFICATIONS: 4"-8" ROCK/40 %-70 % PASSING; 2"-4" ROCK/30 %-40 % PASSING; AND 1"-2" ROCK/10 %-20 % PASSING.
25. IF ANY PART(S) OF THE CLEARING LIMIT BOUNDARY OR TEMPORARY EROSION/SEDIMENTATION CONTROL PLAN IS/ARE DAMAGED, IT SHALL BE REPAIRED IMMEDIATELY.
26. ALL PROPERTIES ADJACENT TO THE PROJECT SITE SHALL BE PROTECTED FROM SEDIMENT DEPOSITION AND RUNOFF.
27. DO NOT FLUSH CONCRETE BY-PRODUCTS OR TRUCKS NEAR OR INTO THE STORM DRAINAGE SYSTEM. IF EXPOSED AGGREGATE IS FLUSHED INTO THE STORM SYSTEM, IT COULD MEAN RE-CLEANING THE ENTIRE DOWNSTREAM STORM SYSTEM, OR POSSIBLY RE-LAYING THE STORM LINE.
28. PRIOR TO THE OCTOBER 1 OF EACH YEAR (THE BEGINNING OF THE WET SEASON), ALL DISTURBED AREAS SHALL BE REVIEWED TO IDENTIFY WHICH ONES CAN BE SEEDED IN PREPARATION FOR THE WINTER RAINS. THE IDENTIFIED DISTURBED AREA SHALL BE SEEDED WITHIN ONE WEEK AFTER OCTOBER 1. A SITE PLAN DEPICTING THE AREAS TO BE SEEDED AND THE AREAS TO REMAIN UNCOVERED SHALL BE SUBMITTED TO THE PUBLIC WORKS CONSTRUCTION INSPECTOR. THE INSPECTOR CAN REQUIRE SEEDING OF ADDITIONAL AREAS IN ORDER TO PROTECT SURFACE WATERS, ADJACENT PROPERTIES, OR DRAINAGE FACILITIES.

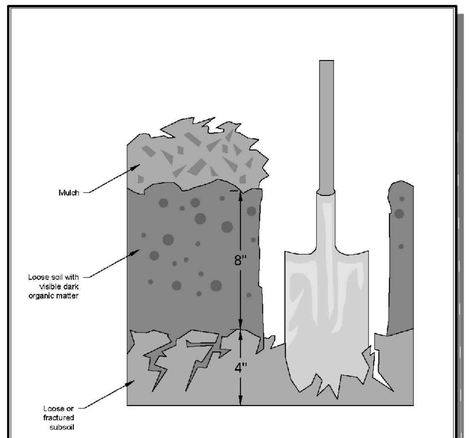


NOTES

1. SEE ECOLOGY STORMWATER MANAGEMENT MANUAL FOR W. WA, BMP C220 FOR ADDITIONAL DESIGN INFORMATION.

INLET PROTECTION

NOT TO SCALE



Reprinted from: *Guidelines and Resources For Implementing Soil Quality and Depth BMP T5.13 in WDOE Stormwater Management Manual for Western Washington*, 2010, Washington Organic Recycling Council

NOT TO SCALE

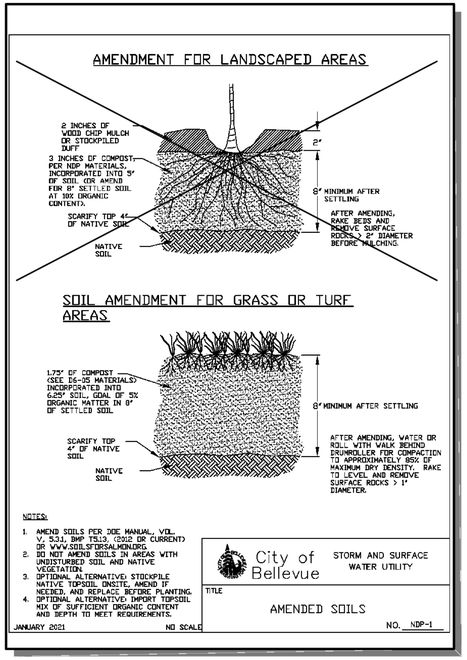
DEPARTMENT OF ECOLOGY
State of Washington

Figure V-5.3.3
Planting Bed Cross-Section
Revised January 2016

Please see http://www.ecy.wa.gov/copyright.html for copyright notice including permissions, limitation of liability, and disclaimer.

AMENDED SOILS - BMP T5.13

NOT TO SCALE



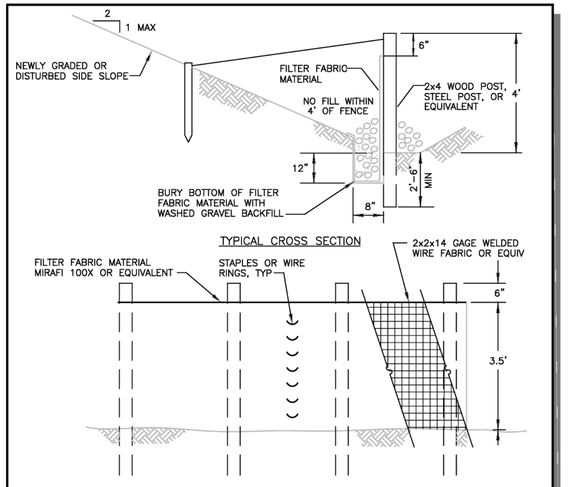
NOTES:

1. AMEND SOILS PER 3DE MANUAL, VOL. V, S.3.3, BMP T5.13, (2012 OR CURRENT) OR WWW.SOILSFORSALMON.ORG.
2. DO NOT AMEND SOILS IN AREAS WITH UNDISTURBED SOIL AND NATIVE VEGETATION.
3. OPTIONAL ALTERNATIVE: STOCKPILE NATIVE TOPSOIL ONSITE, AMEND IF NEEDED, AND REPLACE BEFORE PLANTING.
4. OPTIONAL ALTERNATIVE: IMPORT TOPSOIL MIX OF SUFFICIENT ORGANIC CONTENT AND DEPTH TO MEET REQUIREMENTS.

City of Bellevue — STORM AND SURFACE WATER UTILITY

TITLE: AMENDED SOILS

JANUARY 2021 — NO SCALE — NO. NDP-1



EXISTING UTILITY NOTE

EXISTING UTILITIES ARE SHOWN IN THE APPROXIMATE LOCATION. THERE IS NO GUARANTEE THAT ALL UTILITY LINES ARE SHOWN, OR THAT THE LOCATION, SIZE AND MATERIAL IS ACCURATE. THE CONTRACTOR SHALL UNCOVER ALL INDICATED PIPING WHERE CROSSING, INTERFERENCES, OR CONNECTIONS OCCUR PRIOR TO TRENCHING OR EXCAVATION FOR ANY PIPE OR STRUCTURES, TO DETERMINE ACTUAL LOCATIONS, SIZE AND MATERIAL. THE CONTRACTOR SHALL MAKE THE APPROPRIATE PROVISION FOR PROTECTION OF SAID FACILITIES. THE CONTRACTOR SHALL NOTIFY ONE CALL AT 8-1-1 (WASHINGTON811.COM) AND ARRANGE FOR FIELD LOCATION OF EXISTING FACILITIES BEFORE CONSTRUCTION.

BLUELINE
25 CENTRAL WAY, SUITE 400,
KIRKLAND, WA 98033
P: 425.216.4051 F: 425.216.4052
WWW.THEBLUELINEGROUP.COM

SCALE: AS NOTED
PROJECT MANAGER: YANNICK METS, PE
PROJECT ENGINEER: ALI RAMEZANI, PE
DESIGNER: CHRISTOPHER WSCOMB
ISSUE DATE: 6/14/2022

NO	DATE	BY	REVISIONS

TESC DETAILS
3036 67TH AVENUE SE
SITE PLAN
PARCEL 2174501025
CITY OF MERCER ISLAND WASHINGTON

YANNICK METS — STATE OF WASHINGTON — 56008 — REGISTERED PROFESSIONAL ENGINEER

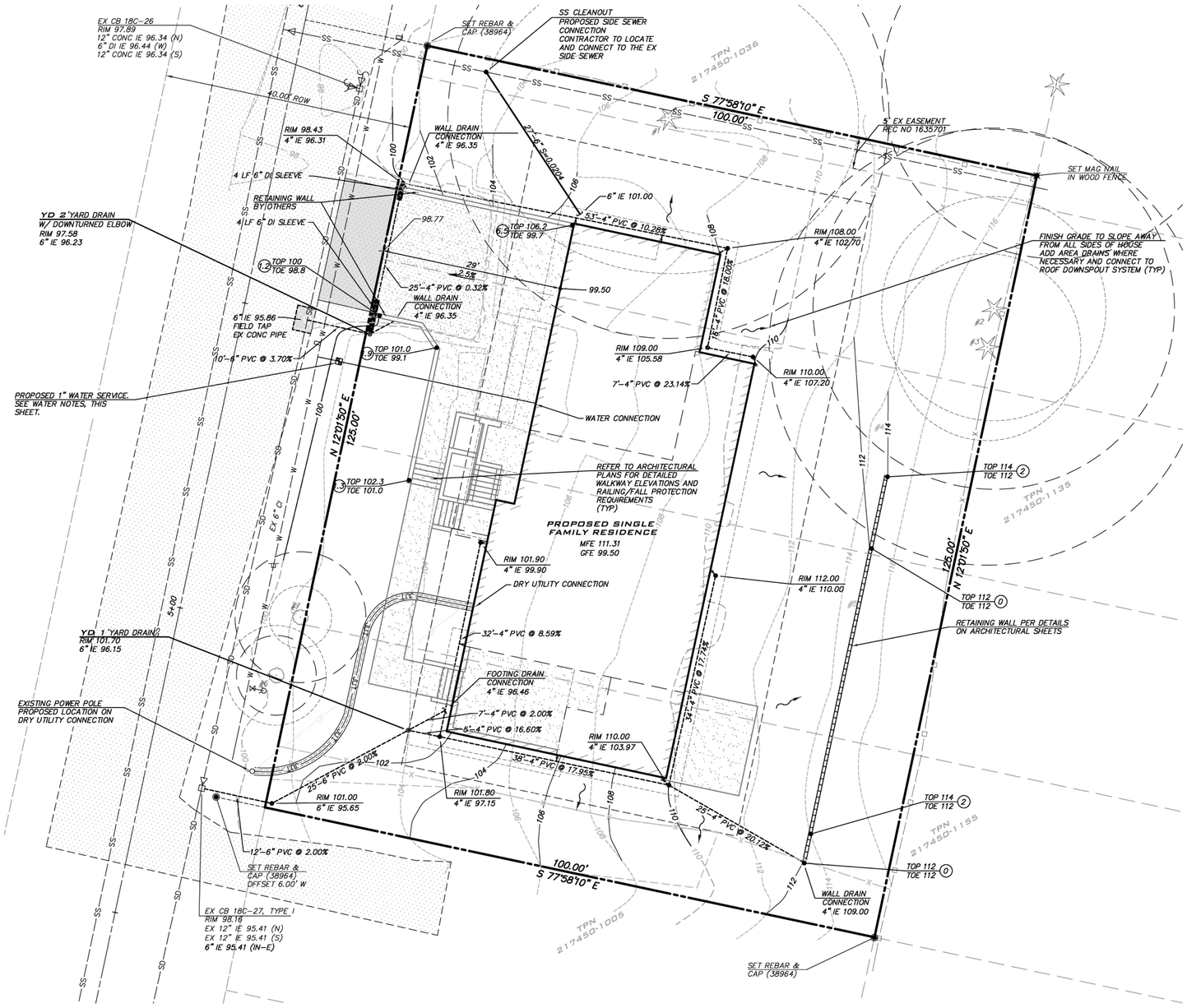
6/16/22

JOB NUMBER: 22-042
SHEET NAME: TP-02
SHT 3 OF 5

22x34
Jun 14, 2022 - 8:29am - User aramezani
E:\Projects\22042\Dwg\Sitefan\220427-dwg

© 2022 BLUELINE

SW 1/4, NW 1/4, SEC 12, TWP 24N, RNG 4E, W.M.



N

SCALE: 1" = 10'
0 5 10 20

TRENCH DRAIN NOTE

TRENCH DRAIN TO BE INSTALLED 3' OFF FACE OF GARAGE AT ELEVATION 3" BELOW GARAGE FINISHED FLOOR.

AMENDED SOILS

THE LAWN AND LANDSCAPE AREAS ARE REQUIRED TO PROVIDE POST-CONSTRUCTION SOIL QUALITY AND DEPTH IN ACCORDANCE WITH BMP T5.13. THE PROJECT CIVIL ENGINEER MUST PROVIDE A LETTER OF CERTIFICATION TO ENSURE THAT THE LAWN AND LANDSCAPE AREAS ARE MEETING THE POST-CONSTRUCTION SOIL QUALITY AND DEPTH REQUIREMENTS SPECIFIED ON THE APPROVED PLAN SET PRIOR TO FINAL INSPECTION OF THE PROJECT.

WATER NOTES

1. IF EXISTING METER MEETS CURRENT CITY STANDARDS IT CAN BE RE-USED OTHERWISE CUT AND CAP SERVICE AT MAIN PER CURRENT PUBLIC WORKS SPECIFICATIONS AND INSTALL NEW SERVICES.
2. NEW 1" WATER SERVICE AND 3/4" METER SHOWN IS TYPICAL SIZE FOR A NEW SINGLE FAMILY HOME. SIZE MAY VARY, BASED ON UPC SIZING CRITERIA, AND SHALL BE CONFIRMED BY BUILDER PRIOR TO CONSTRUCTION.
3. IF NEW WATER SERVICE IS REQUIRED, INSTALL PER MERCER ISLAND SDT DTL W-13.

SANITARY SEWER NOTES

1. EXISTING LOCATION OF SANITARY SEWER PER CITY OF MERCER ISLAND ASBUILT. CONTRACTOR TO VERIFY POINT OF CONNECTION WITHIN THE EASEMENT.
2. EXISTING SANITARY SEWER LINE SHALL BE CUT AND CAPPED AT POINT OF CONNECTION TO THE SIDE SEWER. THE EXISTING SS LINE WITHIN THE EASE,EMT SHALL BE CLEANED, LOCATED AND INSPECTED BY CAMERA TO VERIFY SUITABILITY FOR RE-USE AND NEED FOR RE-LINING.
3. PROPOSED SEWER SERVICE LINE TO BE INSTALLED PER CITY OF MERCER ISLAND STANDARD DETAIL S-18.
4. SANITARY SEWER CLEANOUT TO BE INSTALLED PER CITY OF MERCER ISLAND STANDARD DETAIL S-19.
5. REFER TO CITY OF MERCER ISLAND STANDARD DETAIL S-22 FOR DISCONNECTION AND RECONNECTION NOTES AND SPECIFICATIONS

EXISTING UTILITY NOTE

EXISTING UTILITIES ARE SHOWN IN THE APPROXIMATE LOCATION. THERE IS NO GUARANTEE THAT ALL UTILITY LINES ARE SHOWN, OR THAT THE LOCATION, SIZE AND MATERIAL IS ACCURATE. THE CONTRACTOR SHALL UNCOVER ALL INDICATED PIPING WHERE CROSSING, INTERFERENCES, OR CONNECTIONS OCCUR PRIOR TO TRENCHING OR EXCAVATION FOR ANY PIPE OR STRUCTURES, TO DETERMINE ACTUAL LOCATIONS, SIZE AND MATERIAL. THE CONTRACTOR SHALL MAKE THE APPROPRIATE PROVISION FOR PROTECTION OF SAID FACILITIES. THE CONTRACTOR SHALL NOTIFY ONE CALL AT 8-1-1 (WASHINGTON811.COM) AND ARRANGE FOR FIELD LOCATION OF EXISTING FACILITIES BEFORE CONSTRUCTION.

STORM NOTES

STORM SERVICES TO BE 4" PVC AT 2% MIN SLOPE UNLESS OTHERWISE NOTED. SERVICES DESIGNED TO HAVE AT LEAST 1.5' COVER.

BLUELINE
25 CENTRAL WAY, SUITE 400,
KIRKLAND, WA 98033
P: 425.216.4051 F: 425.216.4052
WWW.THEBLUELINEGROUP.COM

SCALE: AS NOTED
PROJECT MANAGER: YANNICK METS, PE
PROJECT ENGINEER: ALI RAMEZANI, PE
DESIGNER: CHRISTOPHER WSCOMB
ISSUE DATE: 6/14/2022

NO	DATE	BY	REVISIONS

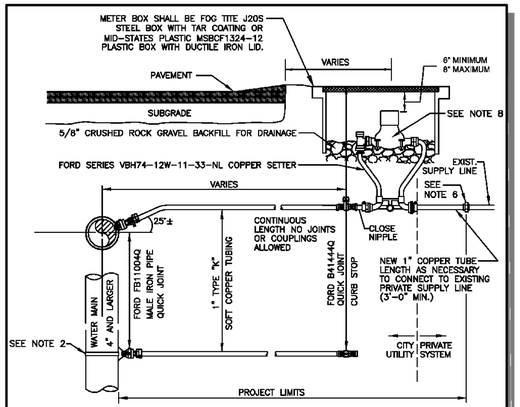
SITE PLAN
3036 67TH AVENUE SE
SITE PLAN
PARCEL 2174501025
CITY OF MERCER ISLAND WASHINGTON

YANNICK METS
STATE OF WASHINGTON
56008
REGISTERED PROFESSIONAL ENGINEER
6/16/22

JOB NUMBER: 22-042
SHEET NAME: SP-01
SHT 4 OF 5

22x34
Jun 14, 2022 - 8:29am - User aramezani
E:\Projects\22042 Uwg Stiefvater\22042SP.dwg

© 2022 BLUELINE



NOTES

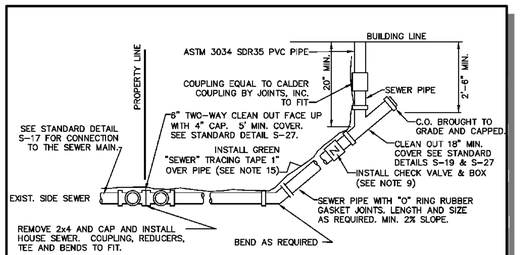
1. WATER SERVICES SHALL COMPLY WITH THE REDUCTION OF LEAD IN DRINKING WATER ACT DATED 01/04/2014.
2. ON EXISTING WATER MAINS USE NYLON COATED D.I. SADDLE WITH STAINLESS STEEL DOUBLE STRAPS, ROMAC 202NS, OR APPROVED EQUAL.
3. MINIMUM DISTANCE BETWEEN CORP STOPS SHALL BE 18" MINIMUM DISTANCE BETWEEN TAPS, BETWEEN CORP STOP AND PIPE ENDS SHALL BE 24", ALL HORIZONALLY STAGGERED.
4. PLASTIC METER BOXES SHALL NOT BE INSTALLED WITHIN ROADWAY, SIDEWALK, OR DRIVEWAYS.
5. UPON CITY ENGINEER'S APPROVAL, METER BOXES ARE ALLOWED TO BE INSTALLED IN PORTLAND CEMENT CONCRETE PAVEMENT OR SIDEWALK.
6. WHEN CONNECTING TO EXISTING PRIVATE SUPPLY LINE CONTAINING FERROUS METAL, PROVIDE INSULATING COUPLING (DB SERIES WITH C21 SERIES ADAPTERS) AND PROVIDE REDUCER AS NECESSARY TO MATCH EXISTING PRIVATE SUPPLY LINE DIAMETER.
7. SERVICE LINE SHALL BE PERPENDICULAR TO THE WATER MAIN AND STRAIGHT TO WATER METER, UNLESS OTHERWISE APPROVED BY CITY ENGINEER. PROVIDE WINDING SLACK IN THE SERVICE LINE BETWEEN THE MAIN AND WATER METER.
8. WATER METER SUPPLIED BY CITY.
9. ALL FITTINGS TO BE BRASS COMPRESSION TYPE, FORD QUICK JOINT OR EQUAL.
10. NO SERVICE CONNECTIONS BETWEEN BLOW-OFF AND END OF MAIN.

CITY OF MERCER ISLAND
STANDARD DETAILS
WATER

1" WATER METER INSTALLATION

02-05-2021	NO SCALE	**W-13**

REV DATE | APPROVED



BUILDING CONNECTION

NOTES

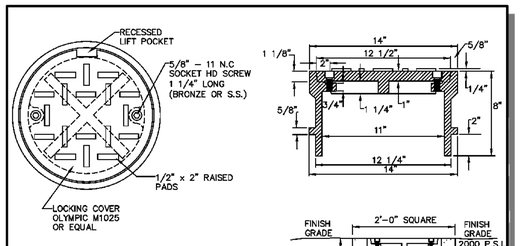
1. ELBOWS SHALL NOT BE GREATER THAN 45 DEGREES.
2. CLEAN OUT IS REQUIRED FOR EACH PIPE LENGTH GREATER THAN 100' AND FOR EACH 90° ACCUMULATED ELBOW/100'.
3. ALL HOUSE PLUMBING OUTLETS MUST BE CONNECTED TO THE SEWER. NO DOWN SPOUTS OR STORM DRAINAGE MAY BE CONNECTED TO THE SEWER SYSTEM.
4. 18" MINIMUM COVERAGE OVER PIPE.
5. LAY PIPE IN STRAIGHT LINE BETWEEN BENDS. MAKE ALL CHANGES IN GRADE OR LINE WITH ¼ BEND OR WYE. 90° CHANGE WITH 1/8 BEND AND WYE.
6. 4" SEWER PIPE MINIMUM SIZE ON PROPERTY. 2% MINIMUM GRADE.
7. ALL CONSTRUCTION SHALL BE IN ACCORDANCE WITH CURRENT SEWER ORDINANCES.
8. ALL CONSTRUCTION REQUIRES A PLAN SHOWING PROPERTY AND DIMENSIONS AND COMPLETION OF SIDE SEWER APPLICATION AND MAINTENANCE AGREEMENT, AS NEEDED.
9. BACK WATER VALVE (CHECK VALVE) IS REQUIRED:
   A. IF CONNECTED TO A SHARED SIDE SEWER.
   B. IF CONNECTION AT HOUSE IS LOWER THAN BOTH UPSTREAM AND DOWNSTREAM MANHOLE.
   C. SEE S-23 & S-24 FOR LAKE LINE REQUIREMENTS.
10. AS-BUILT DRAWING SHOWING LOCATION OF SIDE SEWER & ALL BENDS, C.O. ETC., IN RELATION TO THE HOUSE IS REQUIRED AFTER INSPECTION & INSTALLATION. SEE STANDARD DETAIL S-38 FOR A TYPICAL "AS BUILT".
11. THE MINIMUM PIPE SIZE FOR SIDE SEWERS SHALL BE:
    6" – WITHIN THE PUBLIC RIGHT-OF-WAY.
    4" – SINGLE FAMILY RESIDENCES.
    6" – 2 TO 6 SINGLE FAMILY RESIDENCES.
    6" – BUILDINGS OTHER THAN SINGLE FAMILY RESIDENCES.
12. UTILITY PIPE TRACER TAPE SHALL BE DETECTABLE BELOW GROUND SURFACE, COLOR CODED, WITH UTILITY NAME PRINTED ON TAPE. CONDUCTIVE WARNING TAPE REQUIRED OVER ALL WATER PIPE. TAPE SHALL BE MANUFACTURER'S STANDARD PERMANENT, BRIGHT-COLORED, CONTINUOUS PRINTED PLASTIC TAPE, ALUMINUM BACKED, INTENDED FOR DIRECT-BURIAL SERVICE. TAPE SHALL BE NOT LESS THAN 6" WIDE X 4 MILS THICK.

CITY OF MERCER ISLAND
STANDARD DETAILS
SEWER

HOUSE SEWER CONNECTION

6-5-2009	NO SCALE	**S-18**

REV DATE | APPROVED



FOR PVC PIPE

NOTES

1. SEE S-27 FOR INSTALLATION DETAILS.

CITY OF MERCER ISLAND
STANDARD DETAILS
SEWER

CLEAN OUT DETAIL

6-5-2009	NO SCALE	**S-19**

REV DATE | APPROVED

DISCONNECTION

WHEN DEMOLISHING AN EXISTING BUILDING, THE BUILDING SIDE SEWER SHALL BE DISCONNECTED PRIOR TO REMOVAL OF BUILDING FOUNDATIONS. THE CONTRACTOR SHALL INSTALL A MECHANICAL PLUG WITH NON-SHRINK GROUT AT THE END OF THE SIDE SEWER TO REMAIN IN PLACE. DISCONNECTION'S SHALL BE PERFORMED IN THE PRESENCE OF THE CITY'S UTILITY INSPECTOR. THE CONTRACTOR SHALL PROVIDE AN AS-BUILT DRAWING DEPICTING THE DISCONNECTED SIDE SEWER UPON COMPLETION OF THE WORK.

RECONNECTION

WHEN RECONNECTING TO AN EXISTING SIDE SEWER, THE POINT OF RECONNECTION WILL BE DETERMINED BASED ON THE MAGNITUDE OF THE CONSTRUCTION ON THE PROPERTY.

1. PARTIAL INTERIOR REMODEL AND/OR BUILDING ADDITION – NO SIDE SEWER REPLACEMENT REQUIRED UNLESS A KNOWN PROBLEM EXISTS IN THE SIDE SEWER.
2. COMPLETE INTERIOR REMODEL OF RESIDENCE – ASSESS CONDITION OF EXISTING SIDE SEWER THROUGH VIDEO INSPECTION FROM BUILDING TO PROPERTY LINE AND REPLACE AS NEEDED. IF EXISTING SIDE SEWER IS ASBESTOS CEMENT OR CONCRETE, SIDE SEWER SHALL BE REPLACED FROM BUILDING TO PROPERTY LINE, UNLESS THE APPLICANT PROVES, TO THE SATISFACTION OF THE CITY ENGINEER, THAT THE SIDE SEWER IS WATER TIGHT AND IN SOUND CONDITION.*
3. COMPLETE INTERIOR REMODEL AND BUILDING ADDITION – NEW SIDE SEWER FROM BUILDING TO PROPERTY LINE.*
4. CONSTRUCTION OF A NEW SINGLE FAMILY RESIDENCE – NEW SIDE SEWER FROM BUILDING TO PROPERTY LINE.*
5. BACK WATER VALVE INSTALLATION PER CITY ENGINEER, IF SCENARIO 2, 3 OR 4 IS DIRECTLY ATTACHED TO THE LAKE LINE.

VIDEO INSPECTION OF THE EXISTING SIDE SEWER, BETWEEN THE PROPERTY LINE AND THE SEWER MAIN SHALL BE PERFORMED FOR SCENARIOS NUMBER 3 AND 4.

PROVIDE A COPY OF THE VIDEO DOCUMENTATION TO THE CITY ENGINEER.

REPLACEMENT OR REPAIR OF THAT PORTION OF THE SIDE SEWER BETWEEN THE PROPERTY LINE AND THE SEWER MAIN, WILL BE DETERMINED BY THE CITY ENGINEER, BASED ON THE VIDEO INSPECTION.

*IF THE EXISTING SIDE SEWER IS PVC AND IS LESS THAN TEN YEARS OLD, THE SIDE SEWER DOES NOT HAVE TO BE REPLACED IF A VIDEO INSPECTION AND HYDROSTATIC PRESSURE TEST CONFIRMS THAT THE SIDE SEWER IS IN PROPER WORKING CONDITION. THESE TESTS SHALL BE PERFORMED AFTER ALL HEAVY EQUIPMENT THAT COULD DAMAGE THE SIDE SEWER IS OFF OF THE SITE.

CITY OF MERCER ISLAND
STANDARD DETAILS
SEWER

RESIDENTIAL SIDE SEWER DISCONNECTION & RECONNECTION

6-5-2009	NO SCALE	**S-22**

REV DATE | APPROVED

EXISTING UTILITY NOTE

EXISTING UTILITIES ARE SHOWN IN THE APPROXIMATE LOCATION. THERE IS NO GUARANTEE THAT ALL UTILITY LINES ARE SHOWN, OR THAT THE LOCATION, SIZE AND MATERIAL IS ACCURATE. THE CONTRACTOR SHALL UNCOVER ALL INDICATED PIPING WHERE CROSSING, INTERFERENCES, OR CONNECTIONS OCCUR PRIOR TO TRENCHING OR EXCAVATION FOR ANY PIPE OR STRUCTURES, TO DETERMINE ACTUAL LOCATIONS, SIZE AND MATERIAL. THE CONTRACTOR SHALL MAKE THE APPROPRIATE PROVISION FOR PROTECTION OF SAID FACILITIES. THE CONTRACTOR SHALL NOTIFY ONE CALL AT 8-1-1 (WASHINGTON811.COM) AND ARRANGE FOR FIELD LOCATION OF EXISTING FACILITIES BEFORE CONSTRUCTION.

BLUELINE
25 CENTRAL WAY, SUITE 400,
KIRKLAND, WA 98033
P: 425.216.4051 F: 425.216.4052
WWW.THEBLUELINEGROUP.COM

SCALE: **AS NOTED**
PROJECT MANAGER: **YANNICK METS, PE**
PROJECT ENGINEER: **ALI RAMEZANI, PE**
DESIGNER: **CHRISTOPHER WSCOMB**
ISSUE DATE: **6/14/2022**

NO	DATE	BY	REVISIONS

DETAILS
3036 67TH AVENUE SE
SITE PLAN
PARCEL 2174501025
CITY OF MERCER ISLAND WASHINGTON

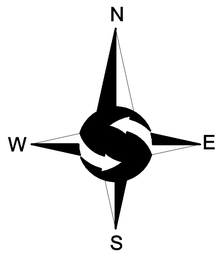
YANNICK METS STATE OF WASHINGTON 56008 REGISTERED PROFESSIONAL ENGINEER

6/16/22

JOB NUMBER: **22-042**
SHEET NAME: **DT-01**
SHT 5 OF 5

22x34
Jun 14, 2022 – 8:29am – User aramzani
E:\Projects\22042\Dwg\Sterlon\220421.dwg

© 2022 BLUELINE



GRAPHIC SCALE

5 0 5 10 20

1 INCH = 10 FT.

LEGEND

○	FOUND REBAR AS DESCRIBED	OHP	OVERHEAD POWER
✳	SET MAG NAIL AS DESCRIBED	OHU	OVERHEAD UTILITIES
●	SET 5/8" X 24" IRON ROD W/1" YELLOW PLASTIC CAP		WOOD FENCE
	POWER METER		CONCRETE WALL
	UTILITY POLE		WIRE FENCE
	CATCH BASIN		TIMBER WALL
	MAILBOX		ROCKERY
	SANITARY SEWER MANHOLE		ASPHALT SURFACE
	WATER VALVE		CONCRETE SURFACE
	FIRE HYDRANT	AP	APPLE
	WATER METER	DF	DOUGLAS FIR
	SIGN	DS	DECIDUOUS
SS	APPROXIMATE LOCATION SANITARY SEWER LINE	PI	PINE
SD	APPROXIMATE LOCATION STORM DRAIN LINE	*	INDICATES MULTI-TRUNK
W	APPROXIMATE LOCATION UNDERGROUND WATER LINE		

LEGAL DESCRIPTION

LOTS 15, 16, 17, 18 AND THE SOUTHERLY 5 FEET OF LOT 19, BLOCK 6, EAST SEATTLE, ACCORDING TO THE PLAT THEREOF RECORDED IN VOLUME 3 OF PLATS, PAGES 22 AND 23, RECORDS OF KING COUNTY, WASHINGTON; EXCEPT THAT PORTION THEREOF LYING WITHIN MERCER ISLAND ROAD (67TH AVENUE SE)

SITUATE IN THE CITY OF MERCER ISLAND, COUNTY OF KING, STATE OF WASHINGTON.

BASIS OF BEARINGS

RECORD OF SURVEY BY TERRANE FOR JAYMARC HOMES, RECORDED ON JULY 26, 2021, IN VOLUME 451 OF SURVEYS, PAGE 259, UNDER RECORDING NO. 20210726900027, RECORDS OF KING COUNTY, WASHINGTON.

PROJECT INFORMATION

SURVEYOR:	SITE SURVEYING, INC. 21923 NE 11TH ST SAMMAMISH, WA 98074 PHONE: 425.298.4412
PROPERTY OWNER:	WILLIAM E. BUCHAN, INC 3036 67TH AVENUE SE MERCER ISLAND, WA 98040
TAX PARCEL NUMBER:	217450-1025
PROJECT ADDRESS:	3036 67TH AVENUE SE MERCER ISLAND, WA 98040
ZONING:	R-8.4
JURISDICTION:	CITY OF MERCER ISLAND
PARCEL ACREAGE:	12,500 S.F. (0.286 ACRES) AS SURVEYED

GENERAL NOTES

1. THIS SURVEY WAS COMPLETED WITHOUT BENEFIT OF A CURRENT TITLE REPORT. EASEMENTS AND OTHER ENCUMBRANCES MAY EXIST ON THIS PROPERTY THAT ARE NOT SHOWN HEREON.

2. INSTRUMENTATION FOR THIS SURVEY WAS A 3-SECOND SPECTRAPRECISION FOCUS 35 TOTAL STATION. PROCEDURES USED IN THIS SURVEY MEET OR EXCEED STANDARDS SET BY WAC 332-130-090.

3. THE INFORMATION ON THIS MAP REPRESENTS THE RESULTS OF A SURVEY MADE IN AUGUST 2021 AND CAN ONLY BE CONSIDERED AS INDICATING THE GENERAL CONDITIONS EXISTING AT THAT TIME.

4. UTILITIES SHOWN ON THIS SURVEY ARE BASED UPON ABOVE GROUND OBSERVATIONS AND AS-BUILT PLANS WHERE AVAILABLE. ACTUAL LOCATIONS OF UNDERGROUND UTILITIES MAY VARY AND UTILITIES NOT SHOWN ON THIS SURVEY MAY EXIST ON THIS SITE.

5. ALL MONUMENTS WERE LOCATED DURING THIS SURVEY UNLESS OTHERWISE NOTED.

VERTICAL DATUM & CONTOUR INTERVAL

DATUM

ELEVATIONS SHOWN ON THIS DRAWING WERE DERIVED FROM INFORMATION PROVIDED BY THE CITY OF MERCER ISLAND.

THE MARK IS A MONUMENT IN CASE AT THE INTERSECTION OF 68TH AVENUE SE W AND SE 32ND STREET.

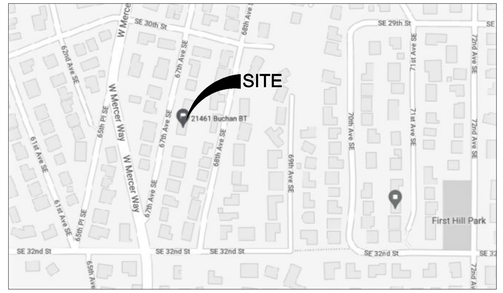
POINT ID NO. 47746;
ELEVATION: 112.571 FEET - NAVD 88

2.0' CONTOUR INTERVAL - THE EXPECTED VERTICAL ACCURACY IS EQUAL TO 1/2 THE CONTOUR INTERVAL OR PLUS / MINUS 1.0' FOR THIS PROJECT.



VICINITY MAP

NTS



SW 1/4, NW 1/4, SEC 12, TWP 24N, RNG 4E, W.M.

Site Surveying, Inc.
21923 NE 11th Street Sammamish, WA 98074
Phone: 425.298.4412
www.sitesurveymapping.com

WOLDENDORP WASHINGTON GARY STATE 23132 NATHAN SWOMA PROFESSIONAL LAND SURVEYOR TEXAS

REVISION	DATE	DRN

TOPOGRAPHIC SURVEY

WILLIAM E. BUCHAN, INC
3036 67TH AVENUE SE
MERCER ISLAND, WA 98040

© 2021, SITE SURVEYING, INC., ALL RIGHTS RESERVED

PROJECT NO. 21-461

DRAWN BY:	EFJ
CHECKED BY:	TNW
DATE:	8/17/21
SHEET	1 OF 1

SYMBOLS AND LEGEND

- (F) FAN- DIRECT VENT TO OUTSIDE
  -BATHROOMS/LAUNDRY 50 CFM MIN.
  -KITCHEN EXHAUST HOOD TO BE MIN. OF 100CFM. IF EXHAUST HOOD EXCEEDS 400 CFM MAKE UP AIR MUST BE PROVIDED PER SECTION M1503.6.
- (WF) WHOLE-HOUSE FAN ON TIMER. SYSTEMS TO CONFORM TO IRC, M1505.4. FAN SIZE PER PLAN. TIMER TO BE SET TO RUN 50% IN EACH 4-HOUR SEGMENT. FRESH AIR TO BE PROVIDED BY THE FORCED AIR SYSTEM DUCTS PER SECTION M1505.4.1.
- (HD) R314.2.3. A HEAT DETECTOR OR HEAT ALARM RATED FOR THE AMBIENT OUTDOOR TEMPERATURES AND HUMIDITY SHALL BE INSTALLED IN NEW GARAGES THAT ARE ATTACHED TO OR LOCATED UNDER NEW AND EXISTING DWELLINGS PER SECTION R314.2.3
- (T) THERMOSTAT @ 56" ABOVE FLOOR
- (⊙) 110v SMOKE ALARM PER I.R.C. R314 WITH BATTERY BACKUP INTERCONNECTED USE A COMBINATION SMOKE/CARBON MONOXIDE ALARM WHEN NOTED

MECHANICAL, PLUMBING, AND ELECTRICAL SYSTEM FOR UNITS: PER DIV. 15,16 SEE SHEET A1

A. PROVIDE 6" DIAMETER FRESH AIR INTAKE FROM OUTSIDE TO RETURN AIR PLENUM AT FURNACE WITH MOTORIZED FLOW DAMPERS.
B. PROVIDE THERMAL EXPANSION TANK AT WATER HEATER.
C. STRAP WATER HEATER TO FRAMING TOP AND BOTTOM.
D. PROVIDE PRESSURE RELIEF LINE PLUMBED TO OUTSIDE.

FLOOR PLAN KEY NOTES

- P-1 OCCUPANCY SEPARATION: APPLY (1) LAYER OF ½" G.W.B. TO GARAGE SIDE OF RESIDENCE, ATTIC SPACES, & TO ALL BEAMS & POSTS SUPPORTING A FLOOR-CEILING ASSEMBLY. APPLY (1) LAYER OF ½" TYPE 'X' G.W.B. TO GARAGE CEILING WHEN UNDER HABITABLE ROOMS. DUCTS THROUGH WALL OR CEILING COMMON TO HOUSE SHALL HAVE MINIMUM 26 GAUGE STEEL.
  SEE DIV. 01 00 26 A. SHEET A-1.
- P-2 1⅜" MIN. SELF CLOSING SOLID WOOD CORE, HONEY-COMB CORE STEEL, OR 20-MINUTE FIRE RATED DOOR, W/ SELF-CLOSER.
  SEE DIV. 01 00 26 B. SHEET A-1
- P-3 SAFETY GLAZING PER I.R.C. SECTION R308
  A. WINDOWS WITHIN 18" OF FLOOR
  B. WINDOWS WITHIN A 24" ARC OF DOORS
  C. WINDOWS AT TUBS AND SHOWERS
  D. GLAZING IN DOORS
  E. WITHIN STAIRWELLS
  F. LESS THAN 60" HORIZ. FROM THE BOT. STAIR TREAD NOSING, & BOT. EDGE OF GLAZING IS LESS THAN 36" ABV. LANDING/WALKING SURFACE
  SEE DIV. 08 80 00 SHEET A-1

FLOOR PLAN KEY NOTES

- P-4 STAIR ASSEMBLY NOTES: PER I.R.C. SECTION R311.5 AND DETAIL 12/D2.
  A. HEADROOM MIN. 6'-8", WIDTH MIN. 3'-0".
  B. TREADS 10" MIN. DEPTH AND MIN. WIDTH OF 36" ABOVE HANDRAIL HEIGHT, RISERS 7¾" MAX. HT. TREAD NOSING TO BE MINIMUM 3/4" AND A MAXIMUM OF 1 1/4" ON STAIRS W/ SOLID RISERS.
  C. HANDRAIL MIN. 34" TO MAX 38" ABOVE TREAD NOSING. HANDRAIL TYPE 1 CIRCULAR TO HAVE 1¼" MIN. TO 2" MAX. CROSS SECTION DIMENSION AND 1 1/2" MIN. CLEAR FROM WALL, RETURN RAIL ENDS. HANDRAILS SHALL BE STRONG ENOUGH TO RESIST A 200# P.L. IN ANY DIRECTION PER I.R.C. TABLE R301.5
  D. INSTALL FIRE BLOCKING BETWEEN STRINGERS AT THE TOP AND BOTTOM OF EACH RUN PER I.R.C. SECTION R302.11.
  E. COVER USABLE SPACE UNDER STAIR W/½"G.W.B. PER I.R.C. SECTION R302.7.
  F. INTERMEDIATE BALUSTERS SHALL BE SPACED W/ LESS THAN 4" BETWEEN BALUSTERS.
  G. PROVIDE STAIRWAY ILLUMINATION PER I.R.C. SECTION R303.6.
  SEE DIV. 01 00 26 SHEET A-1.

FLOOR PLAN KEY NOTES

- P-5 EGRESS WINDOW PER I.R.C., SECTION R310 SEE DIV. 08 60 00 SHEET A-1
- P-6 IGNITERS FOR GAS FIRED APPLIANCES IN GARAGE TO BE 18" MIN. ABOVE TOP OF SLAB. SEE DIV. 15 SHEET A-1
- P-7 COVER WALLS ADJACENT TO TUBS AND SHOWERS WITH NON-ABSORBENT MATERIAL TO 72" ABOVE DRAIN INLETS, PER I.R.C. SECTION 307.2. SEE DIV. 09 25 00 SHEET A-1
- P-8 (2) LAYERS OF FLOOR SHEATHING OVER FRAMING.
- P-9 7¾" MAX. RISER WITH 10" MIN. RUN, IF MORE THAN (3) RISERS, HANDRAIL REQUIRED PER I.R.C. SECTION R311.7.8. SEE DIV. 01 00 2.1 SHEET A-1
- P-10 36"x48" CRAWL SPACE ACCESS. INSULATE AND WEATHER STRIP. SEE DIV. 01 00 2.1 SHEET A-1
- P-11 22"x30" ATTIC SPACE ACCESS W/ 30" HEAD CLEARANCE. INSULATE AND WEATHER STRIP. SEE DIV. 01 00 2.2 SHEET A-1
- P-12 FLOOR MATERIAL BREAK LINE

FLOOR PLAN KEY NOTES

- P-13 WALL LINE ABOVE
- P-14 WALL LINE BELOW
- P-15 FIREPLACE ASSEMBLY NOTES:
  A. DIRECT VENT FIREPLACES. INSTALL PER MFG. SPECIFICATIONS, SHALL CONFORM TO I.R.C. REQUIREMENTS. SEE DIV. 01 00 2.8 SHEET A-1
  B. ZERO CLEARANCE FIREPLACES SHALL CONFORM TO I.R.C. REQUIREMENTS. SEE DIV. 01 00 2.8 SHEET A-1
  C. HEARTH SHALL CONFORM TO I.R.C. REQUIREMENTS. SEE DIV. 01 00 2.8 AND 9 SHEET A-1
  D. FIRE-BLOCK OPENINGS AROUND PENETRATIONS AT EACH FLOOR PER I.R.C. SECTION R 01 00 3.13.
- P-16 SEE SITE PLAN FOR EXTENT OF WALKS AND DRIVEWAYS
- P-17 3" DIAMETER STEEL POST

FLOOR PLAN KEY NOTES

- P-18 42" GUARDRAIL PER I.R.C. SECTION R312 & TABLE R301.5 AT STAIRS SLOPES AT 34" ABOVE STAIR NOSING. CONTRACTOR TO VERIFY TO INSPECTOR THAT ALL GUARDRAILS ARE CAPABLE OF RESISTING 200LB LOAD ON TOP RAIL IN ANY DIRECTION PER R301.5.
- P-19 8" VENT FOR MECHANICAL. 1" CLEARANCE ALL SIDES PER I.R.C. SECTION R1 00 5.3. SEE DIV. 15 SHEET A-1
- P-20 PLANT SHELF
- P-21 UPPER AND LOWER LINEN CABINETS
- P-22 SOFFIT AREA
- P-23 INTEGRATED MAKE UP AIR
- P-24 2x6 STUDS W/ R-21 INSUL. MIN.

GENERAL PLAN NOTES

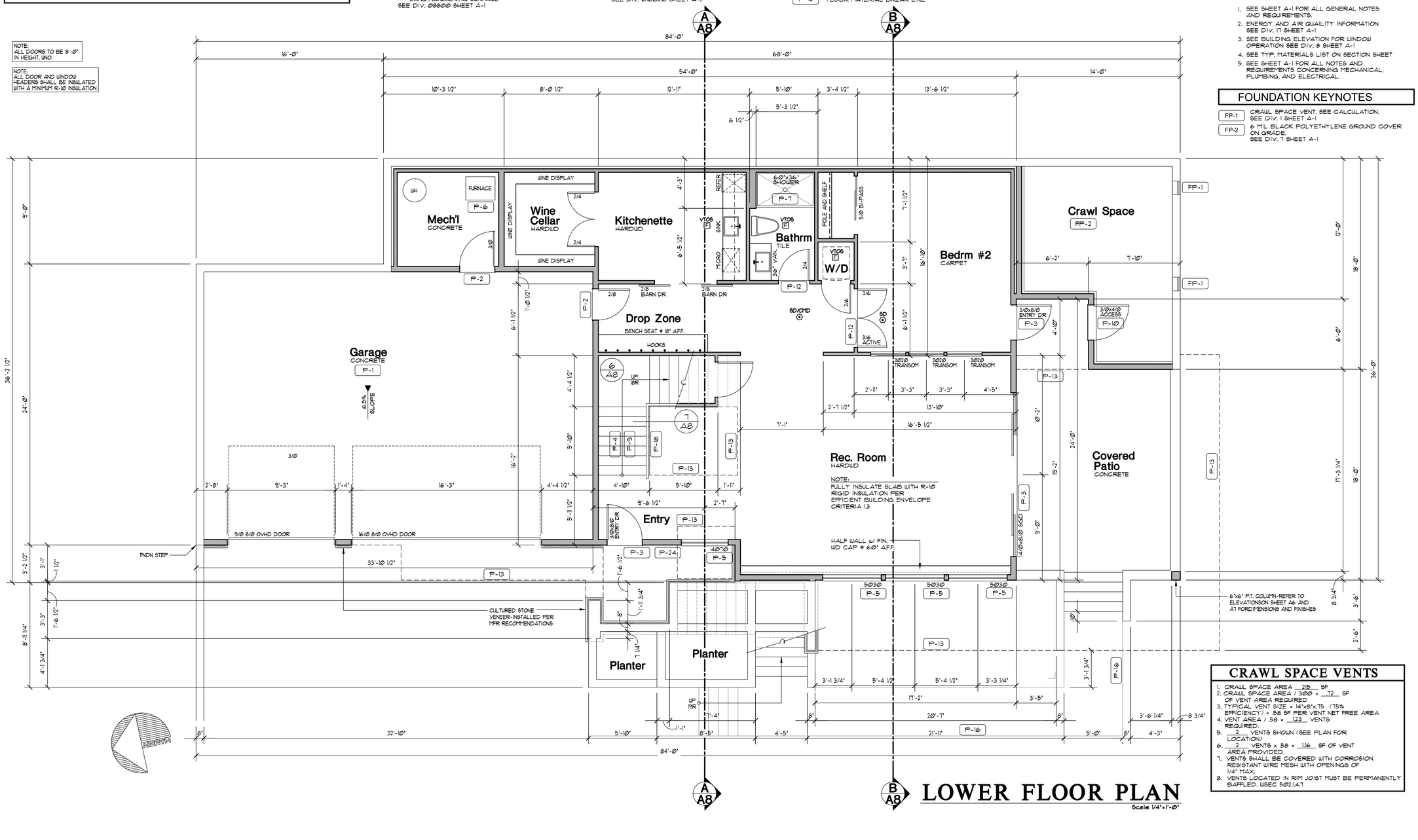
1. SEE SHEET A-1 FOR ALL GENERAL NOTES AND REQUIREMENTS.
2. ENERGY AND AIR QUALITY INFORMATION SEE DIV. 17 SHEET A-1
3. SEE BUILDING ELEVATION FOR WINDOW OPERATION SEE DIV. 8 SHEET A-1
4. SEE TYP. MATERIALS LIST ON SECTION SHEET
5. SEE SHEET A-1 FOR ALL NOTES AND REQUIREMENTS CONCERNING MECHANICAL, PLUMBING, AND ELECTRICAL.

FOUNDATION KEYNOTES

- FP-1 CRAWL SPACE VENT. SEE CALCULATION. SEE DIV. 1 SHEET A-1
- FP-2 6 MIL BLACK POLYETHYLENE GROUND COVER ON GRADE. SEE DIV. 7 SHEET A-1

NOTE:
ALL DOORS TO BE 8'-0" IN HEIGHT, UNO.

NOTE:
ALL DOOR AND WINDOW HEADERS SHALL BE INSULATED WITH A MINIMUM R-10 INSULATION



LOWER FLOOR PLAN

Scale 1/4"=1'-0"

CRAWL SPACE VENTS

1. CRAWL SPACE AREA 215 SF
2. CRAWL SPACE AREA / 300 = 72 SF OF VENT AREA REQUIRED
3. TYPICAL VENT SIZE = 14"x8"x.75 (75% EFFICIENCY) = .58 SF PER VENT NET FREE AREA
4. VENT AREA / .58 = 123 VENTS REQUIRED.
5. 2 VENTS SHOWN (SEE PLAN FOR LOCATION)
6. 2 VENTS x .58 = 116 SF OF VENT AREA PROVIDED.
7. VENTS SHALL BE COVERED WITH CORROSION RESISTANT WIRE MESH WITH OPENINGS OF 1/4" MAX.
8. VENTS LOCATED IN RIM JOIST MUST BE PERMANENTLY BAFFLED. WSEC B02.1.4.7

REGISTERED ARCHITECT RICHARD J. KAPLER STATE OF WASHINGTON 8879 ORIGINAL SIGNATURE REQUIRED

Date	By	Description
10/10/22	REV	PERMIT SET

Buchan Homes
Westview Plan
3036 67th Ave SE **Mercer Island , WA**

THIS DRAWING IS © COPYRIGHTED ARCHITECTURAL INNOVATIONS, P.S. ALL RIGHTS RESERVED

ARCHITECTURAL INNOVATIONS, P.S.
Forward Thinking Design Solutions For Your Environment
14311 SE 16th St
Bellevue, WA 98007
1-800-888-4517
www.kaplerhomeplans.com

TITLE

JOB NO. : 21076.05
STARTING NO. : 21076.03

SHEET
A2

SYMBOLS AND LEGEND

(F) FAN- DIRECT VENT TO OUTSIDE
-BATHROOMS/LAUNDRY 50 CFM MIN.
-KITCHEN EXHAUST HOOD TO BE MIN. OF 1200CFM. IF EXHAUST HOOD EXCEEDS 400 CFM MAKE UP AIR MUST BE PROVIDED PER SECTION M1503.6.

(WF) WHOLE-HOUSE FAN ON TIMER. SYSTEMS TO CONFORM TO IRC, M1505.4. FAN SIZE PER PLAN. TIMER TO BE LOCATED AT THE FAU WITH A MANUAL OVERRIDE SWITCH AT THE FAN LOCATION. TIMER TO BE SET TO RUN 50% IN EACH 4-HOUR SEGMENT. FRESH AIR TO BE PROVIDED BY THE FORCED AIR SYSTEM DUCTS PER SECTION M1505.4.1.

(HD) R314.2.3. A HEAT DETECTOR OR HEAT ALARM RATED FOR THE AMBIENT OUTDOOR TEMPERATURES AND HUMIDITY SHALL BE INSTALLED IN NEW GARAGES THAT ARE ATTACHED TO OR LOCATED UNDER NEW AND EXISTING DWELLINGS PER SECTION R314.2.3

(T) THERMOSTAT @ 50" ABOVE FLOOR

(⊙) 110v SMOKE ALARM PER I.R.C. R314 WITH BATTERY BACKUP INTERCONNECTED USE A COMBINATION SMOKE/CARBON MONOXIDE ALARM WHEN NOTED

MECHANICAL, PLUMBING, AND ELECTRICAL SYSTEM FOR UNITS: PER DIV. 15,16 SEE SHEET A1

FURN WH

A. PROVIDE 6" DIAMETER FRESH AIR INTAKE FROM OUTSIDE TO RETURN AIR PLENUM AT FURNACE WITH MOTORIZED FLOW DAMPERS.
B. PROVIDE THERMAL EXPANSION TANK AT WATER HEATER.
C. STRAP WATER HEATER TO FRAMING TOP AND BOTTOM.
D. PROVIDE PRESSURE RELIEF LINE PLUMBED TO OUTSIDE.

FLOOR PLAN KEY NOTES

P-1 OCCUPANCY SEPARATION: APPLY (1) LAYER OF ½" G.W.B. TO GARAGE SIDE OF RESIDENCE, ATTIC SPACES, & TO ALL BEAMS & POSTS SUPPORTING A FLOOR-CEILING ASSEMBLY. APPLY (1) LAYER OF ⅝" TYPE 'X' G.W.B. TO GARAGE CEILING WHEN UNDER HABITABLE ROOMS. DUCTS THROUGH WALL OR CEILING COMMON TO HOUSE SHALL HAVE MINIMUM 26 GAUGE STEEL.
SEE DIV. Ø1ØØ2.6.A. SHEET A-1.

P-2 1⅜" MIN. SELF CLOSING SOLID WOOD CORE, HONEY-COMB CORE STEEL, OR 20-MINUTE FIRE RATED DOOR, W/ SELF-CLOSER.
SEE DIV. Ø1ØØ2.6.B. SHEET A-1

P-3 SAFETY GLAZING PER I.R.C. SECTION R308
A. WINDOWS WITHIN 18" OF FLOOR
B. WINDOWS WITHIN A 24" ARC OF DOORS
C. WINDOWS AT TUBS AND SHOWERS
D. GLAZING IN DOORS
E. WITHIN STAIRWELLS
F. LESS THAN 60" HORIZ. FROM THE BOT. STAIR TREAD NOSING, & BOT. EDGE OF GLAZING IS LESS THAN 36" ABV. LANDING/WALKING SURFACE
SEE DIV. Ø8ØØØ SHEET A-1

P-4 STAIR ASSEMBLY NOTES: PER I.R.C. SECTION R311.5 AND DETAIL 12/D2.
A. HEADROOM MIN. 6'-8", WIDTH MIN. 3'-Ø".
B. TREADS 10" MIN. DEPTH AND MIN. WIDTH OF 36" ABOVE HANDRAIL HEIGHT, RISERS 7¾" MAX. HT. TREAD NOSING TO BE MINIMUM 3/4" AND A MAXIMUM OF 1 1/4" ON STAIRS W/ SOLID RISERS.
C. HANDRAIL MIN. 34" TO MAX 38" ABOVE TREAD NOSING. HANDRAIL TYPE 1 CIRCULAR TO HAVE 1¼" MIN. TO 2" MAX. CROSS SECTION DIMENSION AND 1 1/2" MIN. CLEAR FROM WALL, RETURN RAIL ENDS. HANDRAILS SHALL BE STRONG ENOUGH TO RESIST A 200# P.L. IN ANY DIRECTION PER I.R.C. TABLE R3Ø1.5
D. INSTALL FIRE BLOCKING BETWEEN STRINGERS AT THE TOP AND BOTTOM OF EACH RUN PER I.R.C. SECTION R3Ø2.11.
E. COVER USABLE SPACE UNDER STAIR W/½"G.W.B. PER I.R.C. SECTION R3Ø2.7.
F. INTERMEDIATE BALUSTERS SHALL BE SPACED W/ LESS THAN 4" BETWEEN BALUSTERS.
G. PROVIDE STAIRWAY ILLUMINATION PER I.R.C. SECTION R326.6.
SEE DIV. Ø1ØØ1.6 SHEET A-1.

P-5 EGRESS WINDOW PER I.R.C., SECTION R31Ø SEE DIV. Ø8600 SHEET A-1

P-6 IGNITERS FOR GAS FIRED APPLIANCES IN GARAGE TO BE 18" MIN. ABOVE TOP OF SLAB. SEE DIV. 15 SHEET A-1

P-7 COVER WALLS ADJACENT TO TUBS AND SHOWERS WITH NON-ABSORBENT MATERIAL TO 72" ABOVE DRAIN INLETS, PER I.R.C. SECTION 3Ø12. SEE DIV. Ø9250 SHEET A-1

P-8 (2) LAYERS OF FLOOR SHEATHING OVER FRAMING.

P-9 7¾" MAX. RISER WITH 10" MIN. RUN, IF MORE THAN (3) RISERS, HANDRAIL REQUIRED PER I.R.C. SECTION R311.7.8. SEE DIV. Ø1ØØ2.1 SHEET A-1

P-10 36"x48" CRAWL SPACE ACCESS. INSULATE AND WEATHER STRIP. SEE DIV. Ø1ØØ2.1 SHEET A-1

P-11 22"x30" ATTIC SPACE ACCESS W/ 30" HEAD CLEARANCE. INSULATE AND WEATHER STRIP. SEE DIV. Ø1ØØ2.2 SHEET A-1

P-12 FLOOR MATERIAL BREAK LINE

P-13 WALL LINE ABOVE

P-14 WALL LINE BELOW

P-15 FIREPLACE ASSEMBLY NOTES:
A. DIRECT VENT FIREPLACES. INSTALL PER MFG. SPECIFICATIONS, SHALL CONFORM TO I.R.C. REQUIREMENTS. SEE DIV. Ø1ØØ2.8 SHEET A-1
B. ZERO CLEARANCE FIREPLACES SHALL CONFORM TO I.R.C. REQUIREMENTS. SEE DIV. Ø1ØØ2.8 SHEET A-1
C. HEARTH SHALL CONFORM TO I.R.C. REQUIREMENTS. SEE DIV. Ø1ØØ2.8 AND 9 SHEET A-1
D. FIRE-BLOCK OPENINGS AROUND PENETRATIONS AT EACH FLOOR PER I.R.C. SECTION R1ØØ3.13.

P-16 SEE SITE PLAN FOR EXTENT OF WALKS AND DRIVEWAYS

P-17 3" DIAMETER STEEL POST

P-18 42" GUARDRAIL PER I.R.C. SECTION R312 & TABLE R3Ø1.5 AT STAIRS SLOPES AT 34" ABOVE STAIR NOSING. CONTRACTOR TO VERIFY TO INSPECTOR THAT ALL GUARDRAILS ARE CAPABLE OF RESISTING 2ØØ.LB LOAD ON TOP RAIL IN ANY DIRECTION PER R3Ø1.5.

P-19 13" VENT FOR MECHANICAL. 1" CLEARANCE ALL SIDES PER I.R.C. SECTION R1ØØ5.3. SEE DIV. 15 SHEET A-1

P-20 PLANT SHELF

P-21 UPPER AND LOWER LINEN CABINETS

P-22 SOFFIT AREA

P-23 INTEGRATED MAKE UP AIR

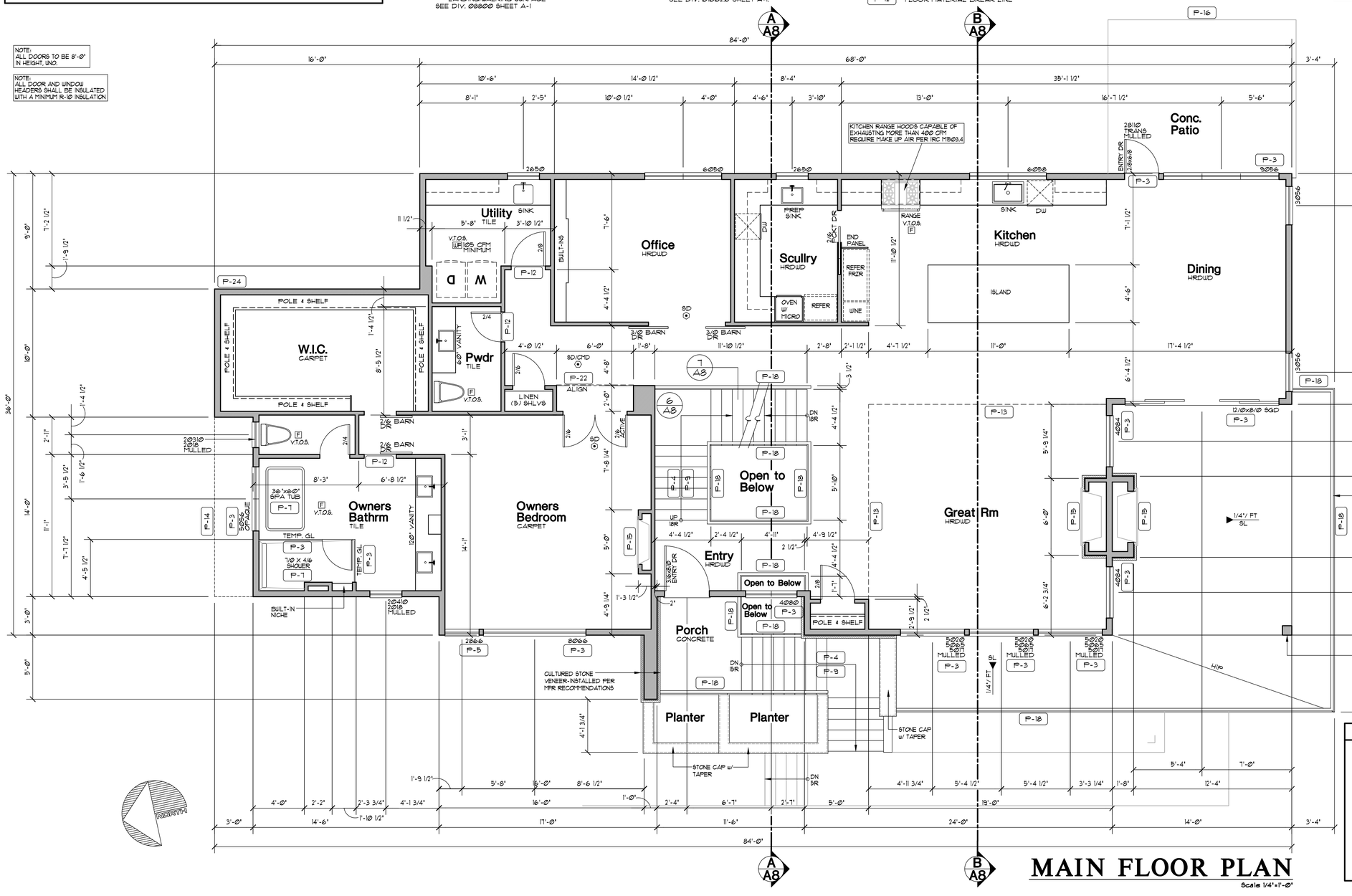
P-24 2x6 STUDS W/ R-21 INSUL. MIN.

GENERAL PLAN NOTES

1. SEE SHEET A-1 FOR ALL GENERAL NOTES AND REQUIREMENTS.
2. ENERGY AND AIR QUALITY INFORMATION SEE DIV. 17 SHEET A-1
3. SEE BUILDING ELEVATION FOR WINDOW OPERATION SEE DIV. 8 SHEET A-1
4. SEE TYP. MATERIALS LIST ON SECTION SHEET
5. SEE SHEET A-1 FOR ALL NOTES AND REQUIREMENTS CONCERNING MECHANICAL, PLUMBING, AND ELECTRICAL.

NOTE:
ALL DOORS TO BE 8'-0" IN HEIGHT, UNO.

NOTE:
ALL DOOR AND WINDOW HEADERS SHALL BE INSULATED WITH A MINIMUM R-10 INSULATION



MAIN FLOOR PLAN

Scale 1/4"=1'-0"

SQUARE FOOTAGE

MAIN FLOOR	2447 SF
UPPER FLOOR	1327 SF
LOWER	1312 SF
TOTAL	5086 SF
GARAGE	897 SF
PORCH/DECK	1409 SF

SQUARE FOOTAGE IS MEASURED TO THE OUTSIDE FACE OF WALLS. STAIRS ARE COUNTED ONCE IN CALCULATIONS. OPEN TO BELOW SPACES AND GARAGES ARE NOT INCLUDED IN CALCULATIONS.

REGISTERED ARCHITECT RICHARD W. KAPLER STATE OF WASHINGTON 8079 ORIGINAL SIGNATURE REQUIRED

Date	By	Description
10/12/22	REV	PERMIT SET

Buchan Homes
Westview Plan
3036 67th Ave SE Mercer Island , WA

THIS DRAWING IS ©COPYRIGHTED ARCHITECTURAL INNOVATIONS, P.S. ALL RIGHTS RESERVED

ARCHITECTURAL INNOVATIONS, P.S.
Forward Thinking Design Solutions For Your Environment
14311 SE 16th St
Bellevue, WA 98007
1-800-888-4517
www.kaplerhomeplans.com

TITLE

JOB NO.: 21076.05
STARTING NO.: 21076.03

SHEET
A3

SYMBOLS AND LEGEND

(F) FAN- DIRECT VENT TO OUTSIDE
-BATHROOMS/LAUNDRY 50 CFM MIN.
-KITCHEN EXHAUST HOOD TO BE MIN. OF 1200CFM. IF EXHAUST HOOD EXCEEDS 400 CFM MAKE UP AIR MUST BE PROVIDED PER SECTION M1503.6.

(UF) WHOLE-HOUSE FAN ON TIMER. SYSTEMS TO CONFORM TO IRC, M1505.4. FAN SIZE PER PLAN. TIMER TO BE LOCATED AT THE FAU WITH A MANUAL OVERRIDE SWITCH AT THE FAN LOCATION. TIMER TO BE SET TO RUN 50% IN EACH 4-HOUR SEGMENT. FRESH AIR TO BE PROVIDED BY THE FORCED AIR SYSTEM DUCTS PER SECTION M1505.4.1.

(HD) R314.2.3. A HEAT DETECTOR OR HEAT ALARM RATED FOR THE AMBIENT OUTDOOR TEMPERATURES AND HUMIDITY SHALL BE INSTALLED IN NEW GARAGES THAT ARE ATTACHED TO OR LOCATED UNDER NEW AND EXISTING DWELLINGS PER SECTION R314.2.3

(T) THERMOSTAT @ 50" ABOVE FLOOR

(⊙) 110v SMOKE ALARM PER I.R.C. R314 WITH BATTERY BACKUP INTERCONNECTED USE A COMBINATION SMOKE/CARBON MONOXIDE ALARM WHEN NOTED

MECHANICAL, PLUMBING, AND ELECTRICAL SYSTEM FOR UNITS: PER DIV. 15,16 SEE SHEET A1

FURN | WH

A. PROVIDE 6" DIAMETER FRESH AIR INTAKE FROM OUTSIDE TO RETURN AIR PLENUM AT FURNACE WITH MOTORIZED FLOW DAMPERS.
B. PROVIDE THERMAL EXPANSION TANK AT WATER HEATER.
C. STRAP WATER HEATER TO FRAMING TOP AND BOTTOM.
D. PROVIDE PRESSURE RELIEF LINE PLUMBED TO OUTSIDE.

FLOOR PLAN KEY NOTES

P-1 OCCUPANCY SEPARATION: APPLY (1) LAYER OF ½" G.W.B. TO GARAGE SIDE OF RESIDENCE, ATTIC SPACES, & TO ALL BEAMS & POSTS SUPPORTING A FLOOR-CEILING ASSEMBLY. APPLY (1) LAYER OF ½" TYPE 'X' G.W.B. TO GARAGE CEILING WHEN UNDER HABITABLE ROOMS. DUCTS THROUGH WALL OR CEILING COMMON TO HOUSE SHALL HAVE MINIMUM 26 GAUGE STEEL.
SEE DIV. 01 00216.A. SHEET A-1.

P-2 1⅜" MIN. SELF CLOSING SOLID WOOD CORE, HONEY-COMB CORE STEEL, OR 20-MINUTE FIRE RATED DOOR, W/ SELF-CLOSER.
SEE DIV. 01 00216.B. SHEET A-1

P-3 SAFETY GLAZING PER I.R.C. SECTION R308
A. WINDOWS WITHIN 18" OF FLOOR
B. WINDOWS WITHIN A 24" ARC OF DOORS
C. WINDOWS AT TUBS AND SHOWERS
D. GLAZING IN DOORS
E. WITHIN STAIRWELLS
F. LESS THAN 60" HORIZ. FROM THE BOT. STAIR TREAD NOSING, 4 BOT. EDGE OF GLAZING IS LESS THAN 36" ABV. LANDING/WALKING SURFACE
SEE DIV. 08800 SHEET A-1

P-4 STAIR ASSEMBLY NOTES: PER I.R.C. SECTION R311.5 AND DETAIL 12/D2.
A. HEADROOM MIN. 6'-8", WIDTH MIN. 3'-0".
B. TREADS 10" MIN. DEPTH AND MIN. WIDTH OF 36" ABOVE HANDRAIL HEIGHT, RISERS 7¾" MAX. HT. TREAD NOSING TO BE MINIMUM 3/4" AND A MAXIMUM OF 1 1/4" ON STAIRS W/ SOLID RISERS.
C. HANDRAIL MIN. 34" TO MAX 38" ABOVE TREAD NOSING. HANDRAIL TYPE 1 CIRCULAR TO HAVE 1¼" MIN. TO 2" MAX. CROSS SECTION DIMENSION AND 1 1/2" MIN. CLEAR FROM WALL, RETURN RAIL ENDS. HANDRAILS SHALL BE STRONG ENOUGH TO RESIST A 200# P.L. IN ANY DIRECTION PER I.R.C. TABLE R301.5
D. INSTALL FIRE BLOCKING BETWEEN STRINGERS AT THE TOP AND BOTTOM OF EACH RUN PER I.R.C. SECTION R302.11.
E. COVER USABLE SPACE UNDER STAIR W/½"G.W.B. PER I.R.C. SECTION R302.7.
F. INTERMEDIATE BALUSTERS SHALL BE SPACED W/ LESS THAN 4" BETWEEN BALUSTERS.
G. PROVIDE STAIRWAY ILLUMINATION PER I.R.C. SECTION R303.6.
SEE DIV. 01 00216 SHEET A-1.

P-5 EGRESS WINDOW PER I.R.C., SECTION R310 SEE DIV. 08600 SHEET A-1

P-6 IGNITERS FOR GAS FIRED APPLIANCES IN GARAGE TO BE 18" MIN. ABOVE TOP OF SLAB. SEE DIV. 15 SHEET A-1

P-7 COVER WALLS ADJACENT TO TUBS AND SHOWERS WITH NON-ABSORBENT MATERIAL TO 72" ABOVE DRAIN INLETS, PER I.R.C. SECTION 307.2. SEE DIV. 09250 SHEET A-1

P-8 (2) LAYERS OF FLOOR SHEATHING OVER FRAMING.

P-9 7¾" MAX. RISER WITH 10" MIN. RUN, IF MORE THAN (3) RISERS, HANDRAIL REQUIRED PER I.R.C. SECTION R311.7.8. SEE DIV. 01 00021 SHEET A-1

P-10 36"x48" CRAWL SPACE ACCESS. INSULATE AND WEATHER STRIP. SEE DIV. 01 00921 SHEET A-1

P-11 22"x30" ATTIC SPACE ACCESS W/ 30" HEAD CLEARANCE. INSULATE AND WEATHER STRIP. SEE DIV. 01 00922 SHEET A-1

P-12 FLOOR MATERIAL BREAK LINE

P-13 WALL LINE ABOVE

P-14 WALL LINE BELOW

P-15 FIREPLACE ASSEMBLY NOTES:
A. DIRECT VENT FIREPLACES. INSTALL PER MFG. SPECIFICATIONS, SHALL CONFORM TO I.R.C. REQUIREMENTS. SEE DIV. 01 00021.8 SHEET A-1
B. ZERO CLEARANCE FIREPLACES SHALL CONFORM TO I.R.C. REQUIREMENTS. SEE DIV. 01 00021.8 SHEET A-1
C. HEARTH SHALL CONFORM TO I.R.C. REQUIREMENTS. SEE DIV. 01 00021.8 AND 9 SHEET A-1
D. FIRE-BLOCK OPENINGS AROUND PENETRATIONS AT EACH FLOOR PER I.R.C. SECTION R1003.13.

P-16 SEE SITE PLAN FOR EXTENT OF WALKS AND DRIVEWAYS

P-17 3" DIAMETER STEEL POST

P-18 42" GUARDRAIL PER I.R.C. SECTION R312 & TABLE R301.5 AT STAIRS SLOPES AT 34° ABOVE STAIR NOSING. CONTRACTOR TO VERIFY TO INSPECTOR THAT ALL GUARDRAILS ARE CAPABLE OF RESISTING 200LB LOAD ON TOP RAIL IN ANY DIRECTION PER R301.5.

P-19 8" VENT FOR MECHANICAL. 1" CLEARANCE ALL SIDES PER I.R.C. SECTION R1003.3. SEE DIV. 15 SHEET A-1

P-20 PLANT SHELF

P-21 UPPER AND LOWER LINEN CABINETS

P-22 SOFFIT AREA

P-23 INTEGRATED MAKE UP AIR

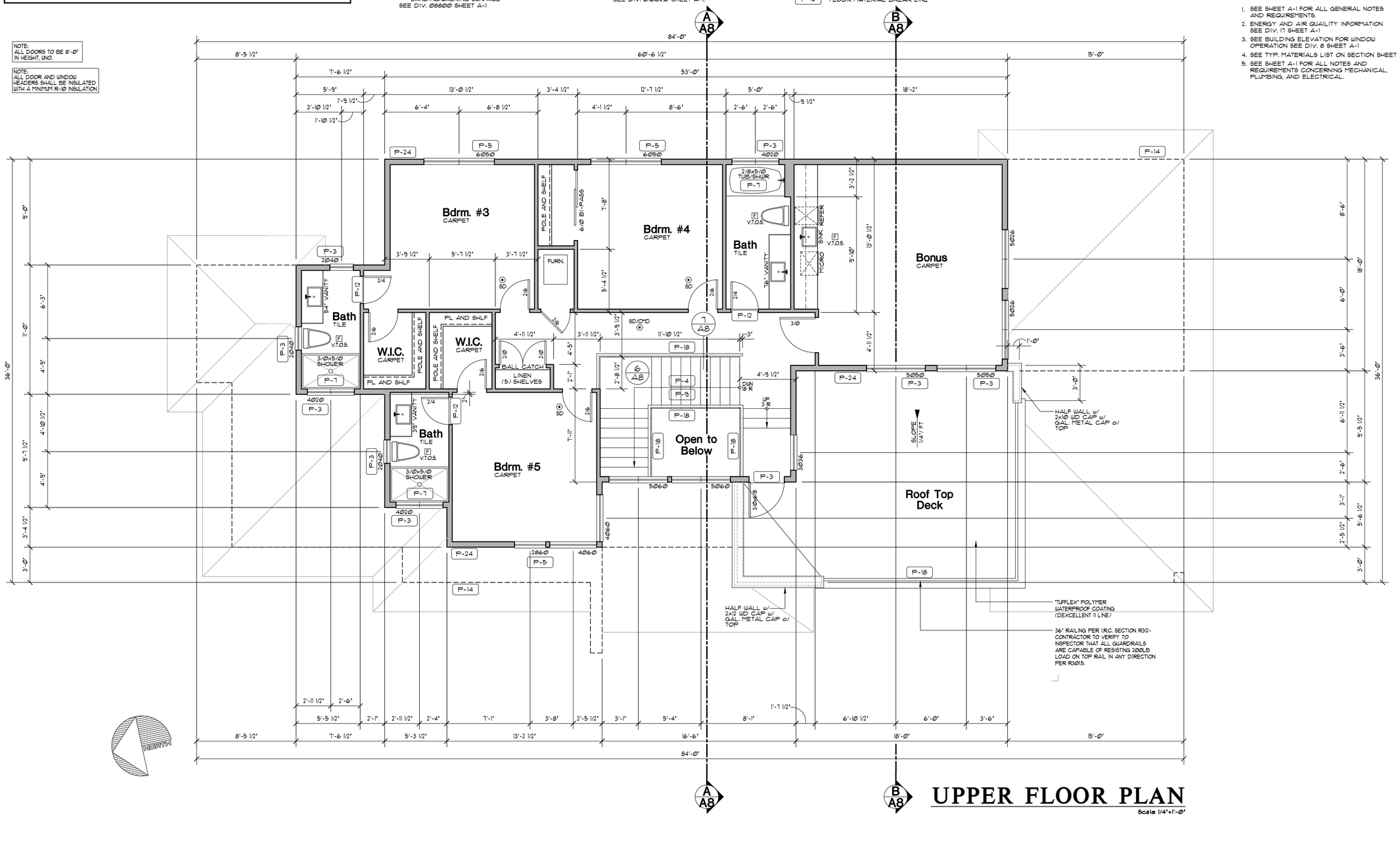
P-24 2x6 STUDS W/ R-21 INSUL. MIN.

GENERAL PLAN NOTES

1. SEE SHEET A-1 FOR ALL GENERAL NOTES AND REQUIREMENTS.
2. ENERGY AND AIR QUALITY INFORMATION SEE DIV. 17 SHEET A-1
3. SEE BUILDING ELEVATION FOR WINDOW OPERATION SEE DIV. 8 SHEET A-1
4. SEE TYP. MATERIALS LIST ON SECTION SHEET
5. SEE SHEET A-1 FOR ALL NOTES AND REQUIREMENTS CONCERNING MECHANICAL, PLUMBING, AND ELECTRICAL.

NOTE:
ALL DOORS TO BE 8'-0" IN HEIGHT, UNO.

NOTE:
ALL DOOR AND WINDOW HEADERS SHALL BE INSULATED WITH A MINIMUM R-10 INSULATION



UPPER FLOOR PLAN

Scale 1/4"=1'-0"

Date	By	Description
10/10/22	REV	PERMIT SET

Buchan Homes
Westview Plan
3036 67th Ave SE Mercer Island , WA

THIS DRAWING IS ©COPYRIGHTED ARCHITECTURAL INNOVATIONS, P.S. ALL RIGHTS RESERVED

ARCHITECTURAL INNOVATIONS, P.S.
Forward Thinking Design Solutions For Your Environment
14311 SE 16th St
Bellevue, WA 98007
1-800-888-4517
www.kapplerhomeplans.com

TITLE

JOB NO. : 21076.05
STARTING NO. : 21076.03

SHEET
A4

(A) ROOF VENT CALCULATION

TOTAL ROOF AREA 1453 SF/ 150 = 9.69 SF OF VENT AREA REQ.

4 ROOF JACKS AT 38 SQ. IN. EACH= 152 SQ. IN.= 105 SF

197 L.F. OF EAVE VENTS AT 6.6-SQ. IN/LF= 1300 SQ. IN.= 9 SF

TOTAL SF OF VENTILATION PROVIDED = 131 SF

(B) ROOF VENT CALCULATION

TOTAL ROOF AREA 325 SF/ 150 = 2.16 SF OF VENT AREA REQ.

0.00 ROOF JACKS AT 38 SQ. IN. EACH= 0.00 SQ. IN.= 0.00 SF

74 L.F. OF EAVE VENTS AT 6.6-SQ. IN/LF= 488 SQ. IN.= 339 SF

TOTAL SF OF VENTILATION PROVIDED = 339 SF

(C) ROOF VENT CALCULATION

TOTAL ROOF AREA 540 SF/ 150 = 3.6 SF OF VENT AREA REQ.

2 ROOF JACKS AT 38 SQ. IN. EACH= 76 SQ. IN.= 53 SF

72 L.F. OF EAVE VENTS AT 6.6-SQ. IN/LF= 475 SQ. IN.= 33 SF

TOTAL SF OF VENTILATION PROVIDED = 383 SF

(D) ROOF VENT CALCULATION

TOTAL ROOF AREA 83 SF/ 150 = .55 SF OF VENT AREA REQ.

0.00 ROOF JACKS AT 38 SQ. IN. EACH= 0.00 SQ. IN.= 0.00 SF

33 L.F. OF EAVE VENTS AT 3.3-SQ. IN/LF= 108 SQ. IN.= 76 SF

TOTAL SF OF VENTILATION PROVIDED = 131 SF

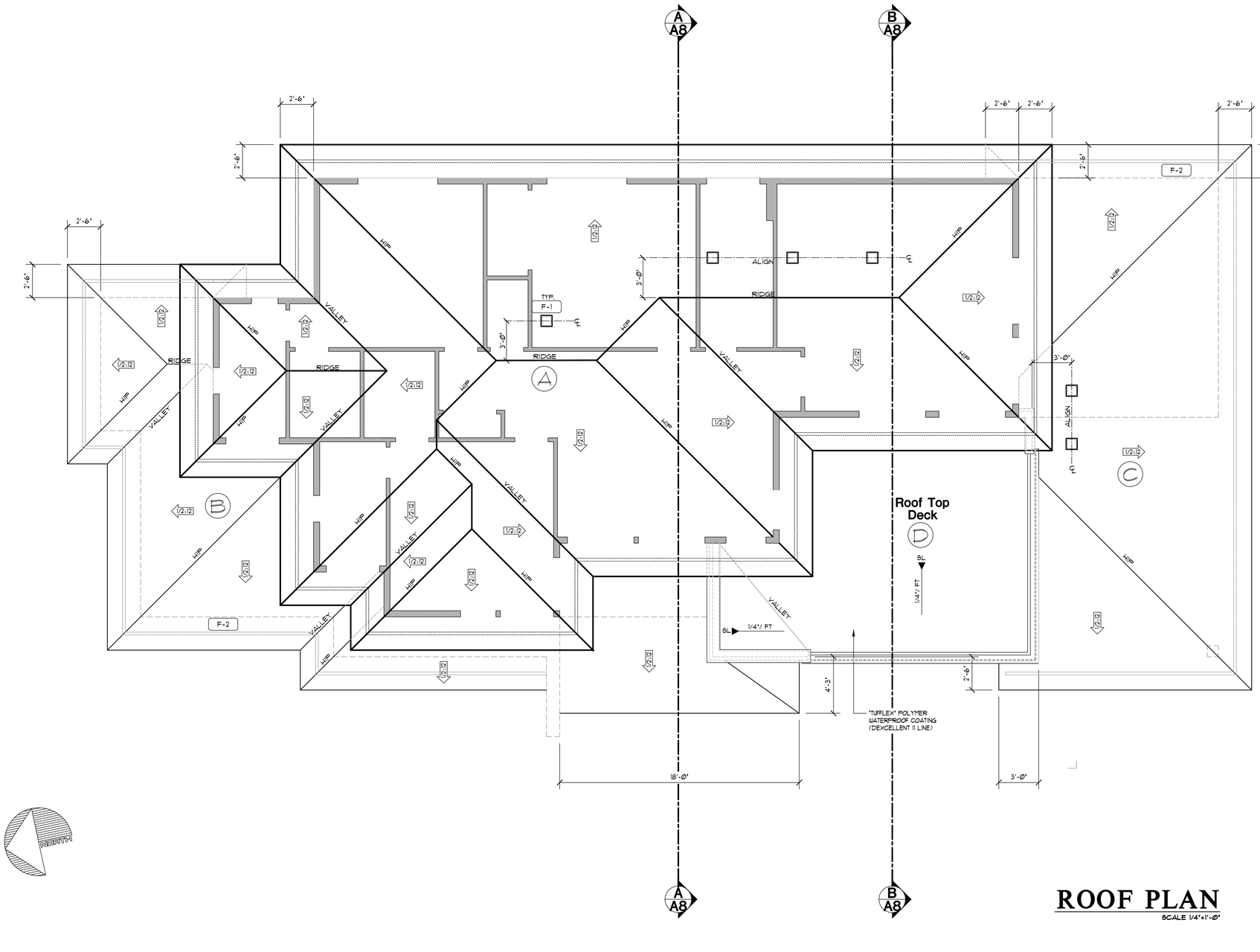
GENERAL PLAN NOTES

1. SEE SHEET A-1 FOR ALL GENERAL NOTES AND REQUIREMENTS.
2. ENERGY AND AIR QUALITY INFORMATION SEE DIV. 11 SHEET A-1
3. SEE BUILDING ELEVATION FOR WINDOW OPERATION SEE DIV. 8 SHEET A-1
4. SEE TYP. MATERIALS LIST ON SECTION SHEET
5. SEE SHEET A-1 FOR ALL NOTES AND REQUIREMENTS CONCERNING MECHANICAL, PLUMBING, AND ELECTRICAL.

ROOF PLAN KEY NOTES

F-1 ATTIC SPACE VENT
SEE CALCULATION
SEE DIV. Ø1Ø8Ø.3.B SHEET A-1

F-2 WALL LINE BELOW



NORTH

ROOF PLAN

SCALE 1/4"=1'-Ø"

REGISTERED ARCHITECT RICHARD P. KAPPLER STATE OF WASHINGTON ORIGINAL SIGNATURE REQUIRED

Date	By	Description
10/21/22	REV	PERMIT SET

Buchan Homes
Westview Plan
3036 67th Ave SE Mercer Island , WA

THIS DRAWING IS ©COPYRIGHTED ARCHITECTURAL INNOVATIONS, P.S. ALL RIGHTS RESERVED

ARCHITECTURAL INNOVATIONS, P.S.
Forward Thinking Design Solutions For Your Environment
14311 SE 16th St
Bellevue, WA 98007
1-800-888-4517
www.kapplerhomeplans.com

TITLE

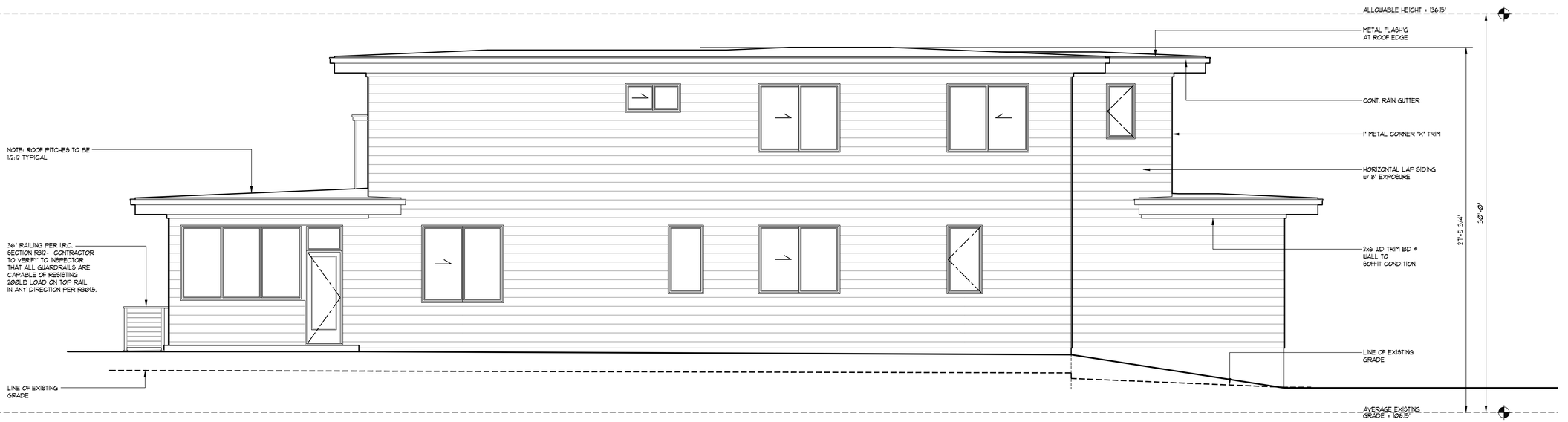
JOB NO. : 21076.05
STARTING NO. : 21076.03

SHEET
A5



FRONT ELEVATION

Scale 1/4"=1'-0"



REAR ELEVATION

Scale 1/4"=1'-0"

TYPICAL BUILDING MATERIALS

ROOF CONSTRUCTION

ROOFING: (DIV. 7) — SHINGLES (DIV. 01000.5)
BUILDING PAPER: (DIV. 7) — 30# BUILDING PAPER
SHEATHING: (DIV. 6) — 7/16" O.S.B. OR EQUAL

FRAMING: (DIV. 6) — PER PLAN
INSULATION: (DIV. 7) — R-49 BLOWN-IN
SOFFIT: (DIV. 7) — 1/2" RE-SAWN PLYWOOD
GWB: (DIV. 9) — 5/8" GWB

EXTERIOR WALL CONSTRUCTION

SIDING MATERIAL: (DIV. 7) — WOOD SIDING (DIV. 0100.5)
BUILDING WRAP: (DIV. 7) — 15# BUILDING PAPER
SHEATHING: (DIV. 6) — 1/2" CDX PLYWOOD OR EQUAL
FRAMING: (DIV. 6) — 2 X 6 STUDS AT 16" OC
INSULATION: (DIV. 7) — R-21 BATT W/ INTEGRAL VAPOR BARRIER

GWB: (DIV. 9) — 1/2" GWB

FLOOR CONSTRUCTION

FLOORING: (DIV. 9) — FINISH PER PLANS (DIV. 0100.5)
SUBFLOOR: (DIV. 6) — 3/4" T&G (PLYWD, COMPLY, OR EQ.)
FRAMING: (DIV. 6) — PER PLANS
INSULATION: (DIV. 7) — R-30 BATT
SOFFIT: (DIV. 7) — 1/2" RE-SAWN PLYWOOD

TRIM:(DIV. 6)

WINDOW: (WITH NO BRICK MOLD) — HEAD: N/A; JAMB: N/A; SILL: N/A
CORNER BOARDS: — INSIDE: 2x2; OUTSIDE: METAL "X"
FASCIA: — 2x8 UNO

REGISTERED ARCHITECT — STATE OF WASHINGTON — BRAD KAPPLER — ORIGINAL SIGNATURE REQUIRED

ARCHITECTURAL INNOVATIONS, P.S.
Forward Thinking Design Solutions For Your Environment
14311 SE 16th St
Bellevue, WA 98007
1-800-888-4517
www.kapplerhomeplans.com

Date	By	Description
10/12/22	REV	PERMIT SET

Buchan Homes

Westview Plan

Permit no. 2210-120

3036 67th Ave SE Mercer Island , WA

THIS DRAWING IS ©COPYRIGHTED ARCHITECTURAL INNOVATIONS, P.S. ALL RIGHTS RESERVED

TITLE

JOB NO. : 21076.05
STARTING NO. : 21076.03

SHEET

A6

2018 Energy Credits

Glazing Schedule

Window, Skylight and Door Schedule

Project Information	Contact Information
Buchan Homes-Westview Plan	Architectural Innovations
3036 67th Ave SE	14311 SE 16th Street
Mercer Island, WA	Bellevue WA 98007

	Ref	U-factor	Qt	Width Feet	Width Inch	Height Feet	Height Inch	Area	UA
Exempt Swinging Door (24 sq. ft. max.)	Simp	0.28	1	3	F	8	F	24.0	6.72
Exempt Glazed Fenestration (15 sq. ft. max.)	Mtg	0.28	1	5	F	3	F	15.0	4.20

Vertical Fenestration (Windows and doors)

Description	Ref	U-factor	Qt	Width Feet	Width Inch	Height Feet	Height Inch	Area	UA
Rec. Room	Mtg	0.28	1	14	F	8	F	112.0	31.36
Rec. Room	Mtg	0.28	2	5	F	3	F	30.0	8.40
Entry (Lower)	Mtg	0.28	1	4	F	7	F	28.0	7.84
Entry (Lower)	Simp	0.28	1	3	F	8	F	24.0	6.72
								0.0	0.00
Entry (Main)	Simp	0.28	1	3	F	8	F	24.0	6.72
Entry (Main)	Mtg	0.28	1	4	F	8	F	32.0	8.96
Owners Bedroom	Mtg	0.28	1	8	F	6	F	48.0	13.44
Owners Bedroom	Mtg	0.28	1	2	F	6	F	17.3	4.85
Owners Bedroom	Mtg	0.28	1	2	F	4	IN	9.7	2.71
Owners Bedroom	Mtg	0.28	1	2	F	1	F	3.3	0.93
Owners Bedroom	Mtg	0.28	1	2	F	5	F	27.5	7.70
Owners Bedroom	Mtg	0.28	1	2	F	3	IN	7.7	2.15
Owners Bedroom	Mtg	0.28	1	2	F	1	F	3.3	0.93
Utility	Mtg	0.28	1	2	F	5	F	12.5	3.50
Office	Mtg	0.28	1	6	F	5	F	30.0	8.40
Scullry	Mtg	0.28	1	2	F	5	F	12.5	3.50
Kitchen	Mtg	0.28	1	6	F	5	F	34.0	9.52
Dining	Simp	0.28	1	2	F	6	F	17.8	4.98
Dining	Mtg	0.28	1	2	F	1	IN	4.9	1.37
Dining	Mtg	0.28	1	9	F	5	F	49.5	13.86
Dining	Mtg	0.28	2	3	F	5	F	33.0	9.24
Dining	Mtg	0.28	1	12	F	8	F	96.0	26.88
Great Rm	Mtg	0.28	2	4	F	8	F	66.7	18.67
Great Rm	Mtg	0.28	5	4	F	2	F	30.0	8.40
Great Rm	Mtg	0.28	3	5	F	6	F	96.3	26.95
Great Rm	Mtg	0.28	3	5	F	11	F	23.8	6.66
								0.0	0.00
Open to Below	Simp	0.28	1	3	F	6	F	20.0	5.60
Open to Below	Mtg	0.28	2	5	F	6	F	60.0	16.80
Open to Below	Mtg	0.28	1	3	F	3	F	10.5	2.94
Bedroom #5	Mtg	0.28	2	4	F	6	F	48.0	13.44
Bedroom #5	Mtg	0.28	1	2	F	8	F	16.0	4.48
Bathrooms	Mtg	0.28	3	4	F	2	F	24.0	6.72
Bathrooms	Mtg	0.28	2	4	F	3	F	24.0	6.72
Bedroom #3	Mtg	0.28	1	6	F	5	F	30.0	8.40
Bedroom #4	Mtg	0.28	1	6	F	5	F	30.0	8.40
Bonus Rm.	Mtg	0.28	2	5	F	7	F	25.0	7.00
Bonus Rm	Mtg	0.28	2	5	F	5	F	50.0	14.00
								0.0	0.00
								0.0	0.00
								0.0	0.00
Sum of Vertical Fenestration Area and UA								1211.2	339.13
Vertical Fenestration Area Weighted U = UA/Area									0.28

Overhead Glazing (Skylights)

Description	Ref	U-factor	Qt	Width Feet	Width Inch	Height Feet	Height Inch	Area	UA
								0.0	0.00
								0.0	0.00
								0.0	0.00
								0.0	0.00
								0.0	0.00
								0.0	0.00
Sum of Overhead Glazing Area and UA								0.0	0.00
Overhead Glazing Area Weighted U = UA/Area									0.00
***Total Sum of Fenestration Area and UA** (for heating system sizing calculations)*								1250.2	350.05

Heat Sizing Worksheet

Simple Heating System Size: Washington State

This heating system sizing calculator is based on the Prescriptive Requirements of the 2018 Washington State Energy Code (WSEC) and ACCA Manuals J and S. This tool will calculate heating loads only. ACCA procedures for sizing cooling systems should be used to determine cooling loads.

Please complete the green drop-downs and boxes that are applicable to your project. As you make selections in the drop-downs for each section, some values will be calculated for you. If you do not see the selection you need in the drop-down options, please contact the WSU Energy Program at energycode@energy.wsu.edu or (360) 956-2042 for assistance.

Project Information	Contact Information
Buch Homes - Westview Plan	Architectural Innovations
3036 67th Ave SE	14311 SE 16th Street
Mercer Island, WA	Bellevue, WA 98007

Heating System Type: ◉ Heat Pump ○ All Other Systems

To see detailed instructions for each section, place your cursor on the word "Instructions".

Design Temperature (Instructions) — Mercer Island — Design Temperature Difference (ΔT): 45 (ΔT = Indoor (70 degrees) - Outdoor (Design Temp))

Area of Building

Conditioned Floor Area (Instructions: Conditioned Floor Area (sq ft)) — 6,068

Average Ceiling Height (Instructions: Average Ceiling Height (ft)) — 9.1 — Conditioned Volume: 49,190

Glazing and Doors (Instructions) — R-0.28

	U-Factor	X	Area	=	UA
	0.280		1,250		350.00

Skylights (Instructions)

	U-Factor	X	Area	=	UA
	0.50		0		—

Insulation

Attic (Instructions) — R-49

	U-Factor	X	Area	=	UA
	0.026		7,400		84.87

Single Rafter or Joint Vaulted Ceilings (Instructions) — No Vaulted Ceilings in this project

	U-Factor	X	Area		UA
	—				

Above Grade Walls (see Figure 5) (Instructions) — R-21 Intermediate

	U-Factor	X	Area		UA
	0.056		3,980		222.28

Floors (Instructions) — R-38

	U-Factor	X	Area		UA
	0.025		810		20.75

Below Grade Walls (see Figure 5) (Instructions) — R-21 Interior

	U-Factor	X	Area		UA
	0.042		540		22.68

Slab Below Grade (see Figure 5) (Instructions) — R-10 Fully Insulated

	F-Factor	X	Length		UA
	0.303		178		53.93

Slab on Grade (see Figure 5) (Instructions) — No Slab on Grade in this project

	F-Factor	X	Length		UA
	—				

Location of Ducts (Instructions) — Conditioned Space — Duct Leakage Coefficient: 1.00

Figure 5



Sum of UA	734.00	
Envelope Heat Load	33,030	Btu / Hour
Sum of UA x ΔT		
Air Leakage Heat Load	23,895	Btu / Hour
Volume x .018 x ΔT x 0.018		
Building Design Heat Load	56,925	Btu / Hour
Envelope heat load + air leakage heat loss		
Building and Duct Heat Load	56,925	Btu / Hour
Ducts in unconditioned space: sum of building heat loss x 1.10		
Ducts in conditioned space: sum of building heat loss x 1		
Maximum Heat Equipment Output	71,156	Btu / Hour
Building and duct heat loss x 1.25 for forced air furnace		
Building and duct heat loss x 1.20 for heat pump		

Prescriptive Compliance

2018 Washington State Energy Code – Residential
Prescriptive Energy Code Compliance for All Climate Zones in Washington
Single Family – New & Additions (effective February 1, 2021) Version 1.0

These requirements apply to all IRC building types, including detached one- and two-family dwellings and multiple single-family dwellings (townhouses).

Project Information	Contact Information
Buchan Homes (AIA# 21076)	Architectural Innovations, P.S.
3036 67th Ave SE Mercer Island	14311 SE 16th Street Bellevue WA 98007

Instructions: This single-family project will use the requirements of the Prescriptive Path below and incorporate the minimum values listed. Based on the size of the structure, the appropriate number of additional credits are checked as chosen by the permit applicant.

Provide all information from the following tables as building permit drawings: Table R402.1 - Insulation and Fenestration Requirements by Component, Table R406.2 - Fuel Normalization Credits and 406.3 - Energy Credits.

Authorized Representative _____ ***Date*** _____

All Climate Zones (Table R402.1.1)

	R-Value [a]	U-Factor [a]
Fenestration U-Factor [b]	n/a	0.30
Skylight U-Factor [b]	n/a	0.50
Glazed Fenestration SHGC [b,c]	n/a	n/a
Ceiling [e]	49	0.026
Wood Frame Wall [d,f]	21 int	0.056
Floor	30	0.029
Below Grade Wall [d,h]	10/15/21 int + TB	0.042
Slab [g] R-Value & Depth	10, 2 ft	n/a

a. *R-values are minimums. U-factors and SHGC are maximums.* When insulation is installed in a cavity that is less than the label or design thickness of the insulation, the compressed *R-value* of the insulation from Appendix Table A101.4 shall not be less than the *R-value* specified in the table.

b. The fenestration *U-factor* column excludes skylights.

c. "10/15/21 +15TB" means R-10 continuous insulation on the exterior of the wall, or R-15 continuous insulation on the interior of the wall, or R-21 cavity insulation plus a thermal break between the slab and the basement wall at the interior of the basement wall. "10/15/21 +15TB" shall be permitted to be met with R-13 cavity insulation on the interior of the basement wall plus R-5 continuous insulation on the interior or exterior of the wall. "TB" means R-5 thermal break between floor slab and basement wall.

d. R-10 continuous insulation is required under heated slab-on-grade floors. See Section R402.2.9.1.

e. For single rafter- or joist-vaulted ceilings, the insulation may be reduced to R-38 if the full insulation depth extends over the top plate of the exterior wall.

f. R-7.5 continuous insulation installed over an existing slab is deemed to be equivalent to the required perimeter slab insulation when applied to existing slabs complying with Section R503.1.1. If foam plastic is used, it shall meet the requirements for thermal barriers protecting foam plastics.

g. For log structures developed in compliance with Standard ICC 400, log walls shall meet the requirements for *climate zone 5* of ICC 400.

h. Int. Intermediate Framing] denotes framing and insulation as described in Section A103.2.2 including standard framing 16 inches on center, 78% of the wall cavity insulated and headers insulated with a minimum of R-10 insulation.

2018 Washington State Energy Code – Residential
Prescriptive Energy Code Compliance for All Climate Zones in Washington
Single Family – New & Additions (effective February 1, 2021)

Each dwelling unit *in a residential building* shall comply with sufficient options from Table R406.2 (fuel normalization credits) and Table 406.3 (energy credits) to achieve the following minimum number of credits. To claim this credit, the building permit drawings shall specify the option selected and the maximum tested building air leakage, and show the qualifying ventilation system and its control sequence of operation.

1. **Small Dwelling Unit:** 3 credits
   Dwelling units less than 1,500 sf in conditioned floor area with less than 300 sf of fenestration area.
   Additions to existing building that are greater than 500 sf of heated floor area but less than 1,500 sf.
2. **Medium Dwelling Unit:** 6 credits
   All dwelling units that are not included in #1 or #3
3. **Large Dwelling Unit:** 7 credits
   Dwelling units exceeding 5,000 sf of conditioned floor area
4. **Additions less than 500 square feet:** 1.3 credits
   All other additions shall meet 1-3 above

Before selecting your credits on this Summary table, review the details in Table 406.3 [Single Family], on page 4.

Summary of Table R406.2

Heating Options	Fuel Normalization Descriptions	Credits - select ONE heating option		User Notes
1	Combustion heating minimum NAECA[a]	0.0	☐	
2	Heat pump[a]	1.0	☑	
3	Electric resistance heat only - furnace or zonal	-1.0	☐	
4	DHP with zonal electric resistance per option 3.4	0.5	☐	
5	All other heating systems	-1.0	☐	
Energy Options	**Energy Credit Option Descriptions**	**Credits - select ONE energy option from each category[f]**		
1.1	Efficient Building Envelope	0.5	☐	
1.2	Efficient Building Envelope	1.0	☐	
1.3	Efficient Building Envelope	1.5	☑	
1.4	Efficient Building Envelope	1.0	☐	
1.5	Efficient Building Envelope	2.0	☐	
1.6	Efficient Building Envelope	3.0	☐	
1.7	Efficient Building Envelope ☐	0.5	☐	
2.1	Air Leakage Control and Efficient Ventilation	0.5	☐	
2.2	Air Leakage Control and Efficient Ventilation	1.0	☐	
2.3	Air Leakage Control and Efficient Ventilation	1.5	☐	
2.4	Air Leakage Control and Efficient Ventilation ☐	2.0	☐	
3.1*	High Efficiency HVAC	1.0	☐	
3.2	High Efficiency HVAC	1.0	☐	
3.3*	High Efficiency HVAC	1.5	☐	
3.4	High Efficiency HVAC	1.5	☐	
3.5	High Efficiency HVAC	1.5	☑	
3.6*	High Efficiency HVAC ☐	2.0	☐	
4.1	High Efficiency HVAC Distribution System	0.5	☐	
4.2	High Efficiency HVAC Distribution System ☐	1.0	☑	

2018 Washington State Energy Code – Residential
Prescriptive Energy Code Compliance for All Climate Zones in Washington
Single Family – New & Additions (effective February 1, 2021)

Summary of Table R406.2 (cont.)

Energy Options	Energy Credit Option Descriptions (cont.)	Credits - select ONE energy option from each category[f]		User Notes
5.1[f]	Efficient Water Heating	0.5	☐	
5.2	Efficient Water Heating	0.5	☐	
5.3	Efficient Water Heating	1.0	☐	
5.4	Efficient Water Heating	1.5	☐	
5.5	Efficient Water Heating	2.0	☑	
5.6	Efficient Water Heating ☐	2.5	☐	
6.1*	Renewable Electric Energy (3 credits max)	1.0	1	
7.1	Appliance Package	0.5	☐	
	Total Credits	7.0	Calculate Total	Clear Form

a. An alternative heating source sized at a maximum of 0.5 W/sf (equivalent) of heated floor area or 500 W, whichever is bigger, may be installed in the dwelling unit.
b. Equipment listed in Table C403.3.2(4) or C403.3.2(5)
c. Equipment listed in Table C403.3.2(1) or C403.3.2(2)
d. You cannot select more than one option from any category EXCEPT in category 5. Option 5.1 may be combined with options 5.2 through 5.6. See Table 406.3.
e. 1.0 credit for each 3,200 kWh of electrical generation provided annually, up to 3 credits max.
See the complete Table R406.2 for all requirements and option descriptions.
f. Use the single radiobutton in the upper right of the second column to deselect radiobuttons in that group.

lease print only pages 1 through 3 of this worksheet for submission to your building official.

2 HEAT PUMP 1.0 credits
EQUIPMENT LISTED IN TABLE C403.3.2(1) OR C403.3.2(2)

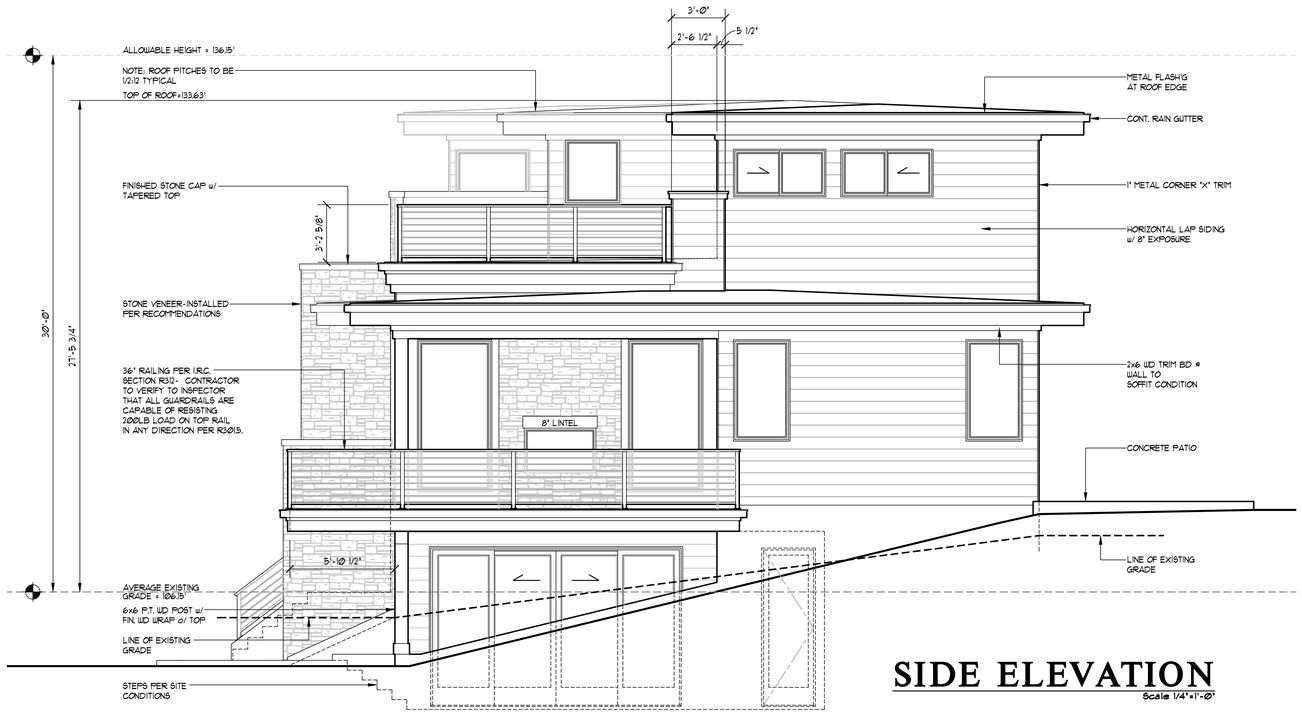
1.3 EFFICIENT BUILDING ENVELOPE .5 credits
VERTICAL FENESTRATION MIN U=.28
FLOOR R-38
SLAB ON GRADE R-10 UNDER ENTIRE SLAB

3.5 HIGH EFFICIENCY HVAC EQUIPMENT 1.5 credits
AIR-SOURCE, CENTRALLY DUCTED HEAT PUMP WITH MINIMUM HSPF OF 11.0

4.2 HIGH EFFICIENCY HVAC DISTRIBUTION 1.0 credits
HVAC EQUIPMENT AND ASSOCIATED DUCT SYSTEM(S) INSTALLATION SHALL COMPLY WITH THE REQUIREMENTS OF SECTION R-403.3.3
LOCATED SYSTEM COMPONENTS IN CONDITIONED CRAWL SPACES IS NOT PERMITTED UNDER THIS OPTION.
ELECTRICAL RESISTANCE HEAT AND DUCTLESS HEAT PUMPS ARE NOT PERMITTED UNDER THIS OPTION.
DIRECT COMBUSTION HEATING EQUIPMENT WITH AFUE LESS THAN 80% IS NOT PERMITTED UNDER THIS OPTION.

5.5 EFFICIENT WATER HEATING 2.0 credit
WATER HEATING SYSTEM SHALL INCLUDE ONE OF THE FOLLOWING:
ELECTRIC HEAT PUMP WATER HEATER MEETING THE STANDARDS FOR TIER 3 OF NEEA's ADVANCED WATER HEATING SPECIFICATION.
OR
FOR R-2 OCCUPANCY, ELECTRIC HEAT PUMP WATER HEATER(S) MEETING THE STANDARDS FOR TIER 3 OF NEEA's ADVANCED WATER HEATING SPECIFICATION, SHALL SUPPLY DOMESTIC HOT WATER TO ALL UNITS. IF ONE WATER HEATER IS SERVING MORE THAN ON DWELLING UNIT, ALL HOT WATER SUPPLY AND RETICULATION PIPING SHALL BE INSULATE WITH MIN R-8 MINIMUM PIPE INSULATION

6.1 RENEWABLE ELECTRIC ENERGY OPTION 1.0 credit
SOLAR ENERGY PANELS TO BE INSTALLED ON EXISTING ROOF. Documentation showing photovoltaic shall be submitted indicating minimum annual energy power production.



SIDE ELEVATION

Scale 1/4"=1'-0"



SIDE ELEVATION

Scale 1/4"=1'-0"

ARCHITECTURAL INNOVATIONS, P.S.
Forward Thinking Design Solutions For Your Environment
14311 SE 16th St
Bellevue, WA 98007
1-800-888-4517
www.kaptchenplans.com

Date	By	Description
10/20/22	REV	PERMIT SET

Buchan Homes
Westview Plan
Permit no. 2210-120
3036 67th Ave SE Mercer Island , WA

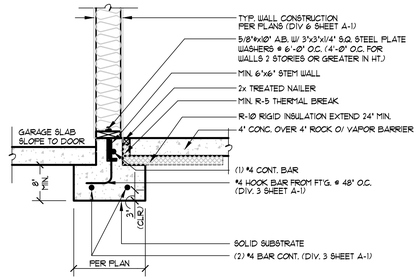
©COPYRIGHTED ARCHITECTURAL INNOVATIONS, P.S. ALL RIGHTS RESERVED
THIS DRAWING IS ©COPYRIGHTED

TITLE

JOB NO. :	21076.05
STARTING NO. :	21076.03

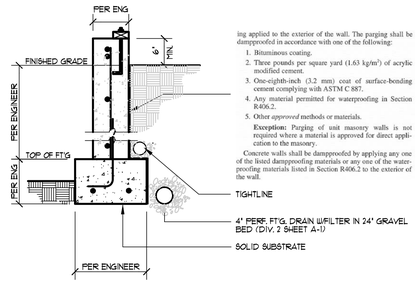
SHEET

A7



5 FOUNDATION DETAIL
3/4"=1'-0"

03300-00000-78



ing applied to the exterior of the wall. The parging shall be dampproofed in accordance with one of the following:

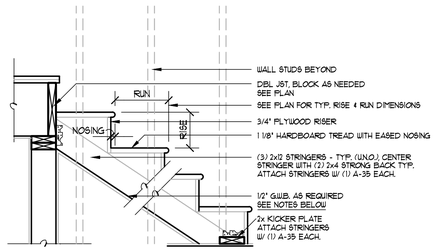
1. Bituminous coating.
2. Three pounds per square yard (1.63 kg/m²) of acrylic modified cement.
3. One-eighth-inch (3.2 mm) coat of surface-bonding cement complying with ASTM C 887.
4. Any material permitted for waterproofing in Section R406.2.
5. Other *approved* methods or materials.

Exception: Parging of unit masonry walls is not required where a material is approved for direct application to the masonry.

Concrete walls shall be dampproofed by applying any one of the listed dampproofing materials or any one of the waterproofing materials listed in Section R406.2 to the exterior of the wall.

1 DAMP PROOFING DETAIL
3/4"=1'-0"

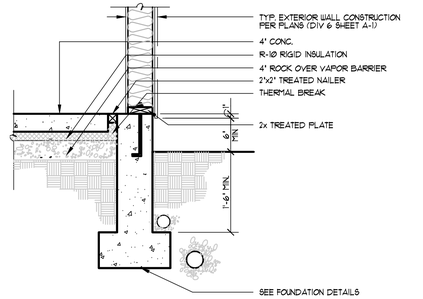
03300-07100-01



1. HEADROOM MIN. 6'-8", WIDTH MIN. 3'-0" PER I.R.C. SECTION R311.7.
2. TREADS 10" MIN. DEPTH FROM LEADING EDGES OF NOSING TO NOSING AND RISERS 7¾" MAX. HEIGHT PER I.R.C. SECTION R311.5.
3. HANDRAIL MIN. 34" TO MAX. 38" ABOVE TREAD NOSING. HANDRAIL TYPE 1 CIRCULAR TO HAVE 1 1/4" MIN. TO 2" MAX. CROSS SECTION DIMENSION AND 1 1/2" MIN. CLEAR FROM WALL. RETURN RAIL ENDS. HANDRAILS SHALL BE STRONG ENOUGH TO RESIST A 200# POUND POINT LOAD IN ANY DIRECTION PER I.R.C. TABLE R301.5
4. INSTALL FIRE BLOCKING BETWEEN STRINGERS AT THE TOP AND BOTTOM OF EACH RUN PER I.R.C. SECTION R602.8.
5. COVER USABLE SPACE UNDER STAIR WITH 1/2" GWB. PER I.R.C. SECTION R302.7.
6. INTERMEDIATE BALUSTERS SHALL BE SPACED W/ LESS THAN 4" BETWEEN BALUSTERS PER I.R.C. SECTION R312.2.
7. TREAD NOSING TO HAVE A MAX. RADIUS OF 9/16 PROJECT A MIN. 3/4" AND A MAX. OF 1 1/4" ON STAIRS W/ SOLID RISERS. BEVELING OF NOSING NOT TO EXCEED 1/2", PER I.R.C. SECTION R311.5.3

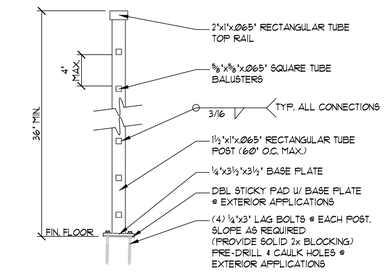
6 STAIR SECTION DETAIL
3/4"=1'-0"

06200-06100-01

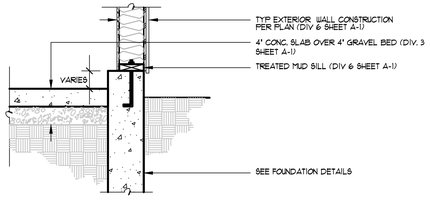


2 FOUNDATION DETAIL
3/4"=1'-0"

03300-00000-18

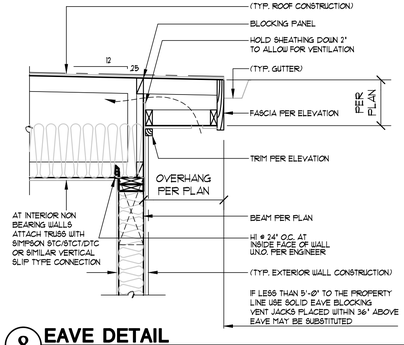


7 STANDARD RAIL DETAIL
1 1/2"=1'-0"



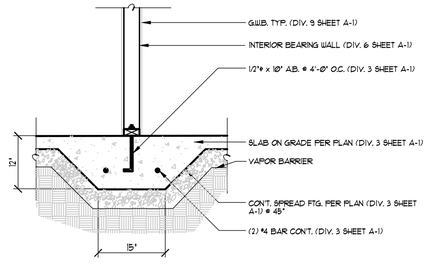
3 SLAB @ STEM WALL
3/4"=1'-0"

06100-03300-03



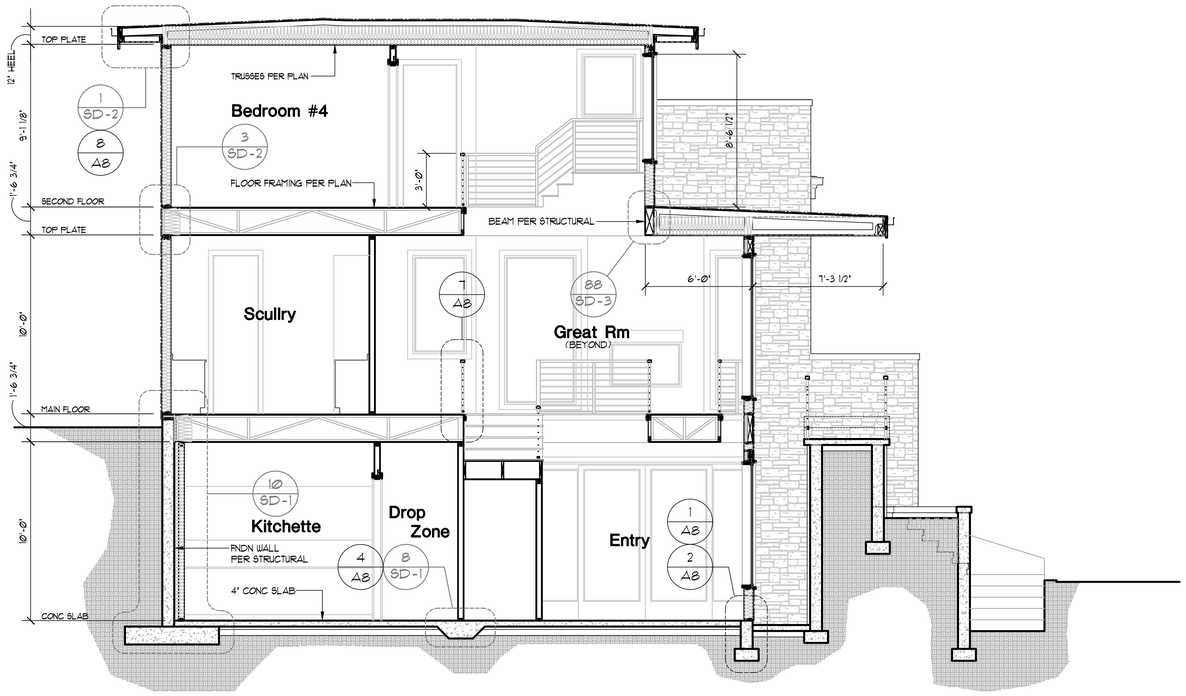
8 EAVE DETAIL
3/4"=1'-0"

06100-07900-18

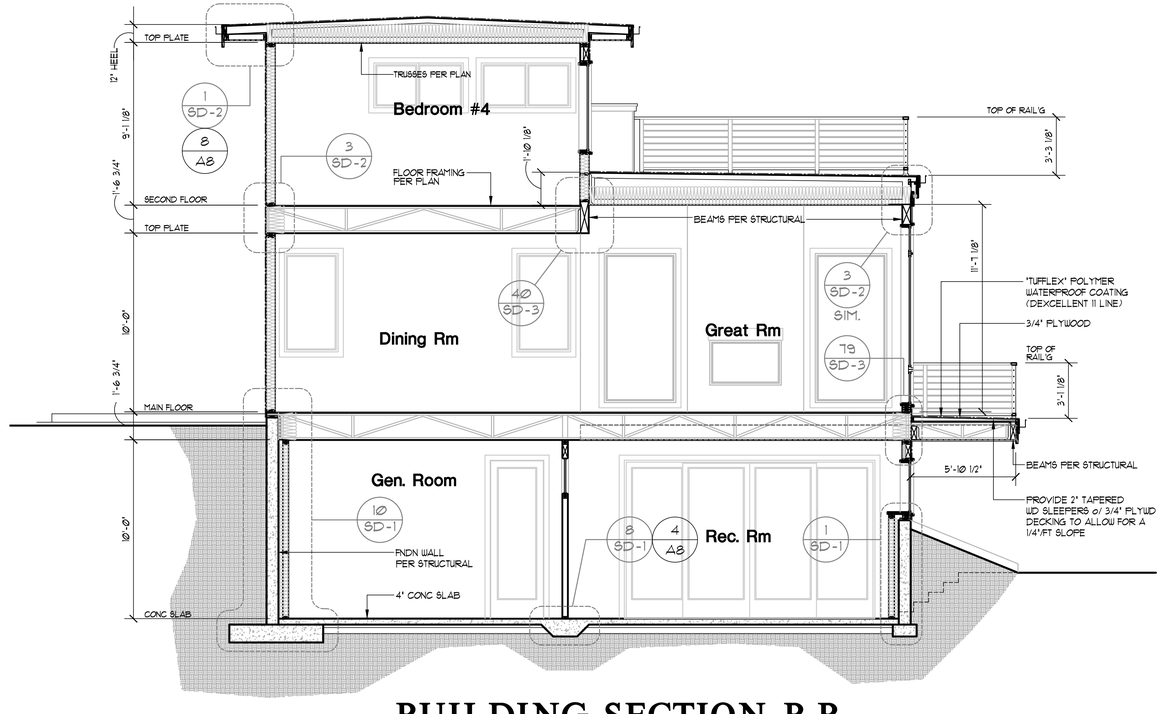


4 FOUNDATION/FRAMING CONNECTION
3/4"=1'-0"

03300-06100-03



BUILDING SECTION A-A
Scale 1/4"=1'-0"



BUILDING SECTION B-B
Scale 1/4"=1'-0"

Buchan Homes
Westview Plan
3036 67th Ave SE Mercer Island , WA

THIS DRAWING IS ©COPYRIGHTED ARCHITECTURAL INNOVATIONS, P.S. ALL RIGHTS RESERVED

Date	By	Description
10/12/22	REV	PERMIT SET

ARCHITECTURAL INNOVATIONS, P.S.
Forward Thinking Design Solutions For Your Environment
14311 SE 16th St.
Bellevue, WA 98007
1-800-888-4517
www.kaplehomeplans.com

TITLE

JOB NO. : 21076.05
STARTING NO. : 21076.03

SHEET
A8

PORCH SLAB

4" CONC. SLAB ON GRADE ON 8 MIL VAPOR BARRIER ON 4" MIN. GRANULAR FILL ON 95% COMPACTED FILL/VIRGIN SOIL

GARAGE SLAB

4" CONC. SLAB ON GRADE ON 4" MIN. GRANULAR FILL ON 95% COMPACTED FILL/VIRGIN SOIL

BASEMENT SLAB

4" CONC. SLAB ON GRADE ON 8 MIL VAPOR BARRIER ON 4" MIN. GRANULAR FILL ON 95% COMPACTED FILL/VIRGIN SOIL

GENERAL STRUCTURAL NOTES

FOUNDATION

- DESIGN IS BASED ON 2018 INTERNATIONAL RESIDENTIAL CODE & 2018 INTERNATIONAL BUILDING CODE
- FOUNDATIONS HAS BEEN DESIGNED BASED ON GEOTECH REPORT PROVIDED BY TERRA ASSOCIATES, INC., DATED MAY 20, 2022.
- DESIGN LOADS:
  SOIL: 2,000 PSF ALLOWABLE BEARING PRESSURE
- CONCRETE SHALL ATTAIN THE FOLLOWING MINIMUM COMPRESSIVE STRENGTHS IN 28 DAYS, U.N.O.:
  f'c = 2,500 psi: ..... FOUNDATION WALLS*
  2,500 psi: ..... FOOTINGS*
  2,500 psi: ..... INTERIOR SLABS ON GRADE
  3,500 psi: ..... EXT. SLABS ON GRADE
  f_y = 60,000 psi
  * UTILIZE 5½" SACK 2,500 PSI CONCRETE MIXES THAT ARE EQUIVALENT TO 3,000 PSI CONCRETE FOR WEATHERING POTENTIAL
- ALL CONCRETE EXPOSED TO THE WEATHER SHALL NOT HAVE LESS THAN 5% OR MORE THAN 7% AIR ENTRAINMENT.
- TYPICAL REINFORCEMENT DETAILS: LAP ALL REBAR 24" MIN.; BEND BARS AND LAP AT CORNERS; PROVIDE 6" HOOK INTO SUPPORTING FOOTINGS WHEN FOOTINGS INTERSECT; PROVIDE 3" MINIMUM COVER AT THE BOTTOM BARS AND 1 1/2" COVER AT THE SIDES.
- FOUNDATION WALLS SHALL BE BRACED, PRIOR TO BACKFILLING, BY EITHER ADEQUATE TEMPORARY BRACING OR INSTALLATION OF FIRST FLOOR DECK.
- ALL FOOTINGS SHALL BEAR BELOW FROST LINE. CONSULT SOILS REPORT/ LOCAL MUNICIPALITY FOR MINIMUM DEPTH BELOW GRADE.
- FOOTINGS AND SLABS ON GRADE SHALL BEAR ON VIRGIN SOIL OR 95% COMPACTED FILL.
- PROVIDE CONTROL JOINTS AT ALL INSIDE CORNERS OF SLAB EDGES, AND OTHER LOCATIONS WHERE SLAB CRACKS ARE LIKELY TO DEVELOP. (15'-0" O.C.)
- FASTEN SILL PLATES TO FOUNDATION WALLS WITH ⅝" DIA. ANCHOR BOLTS w/ MIN. 3"x3"x ¼" PLATE WASHERS (EDGE OF WASHER TO BE LOCATED WITHIN ½" OF EXTERIOR EDGE OF SILL PLATE) & NUTS @ 6'-0" O.C. @ 2-STORY & 4'-0" O.C. @ 3-STORY CONDITIONS w/ 7" MIN. EMBEDMENT INTO CONC. PROVIDE A MINIMUM OF 2 ANCHORS PER PLATE, 12" MAXIMUM FROM PLATE ENDS, U.N.O. (SEE FND. DETAILS).
- ALL LUMBER EXPOSED TO WEATHER OR IN CONTACT W/ CONCRETE OR MASONRY FOUNDATION SHALL BE PRESERVATIVE TREATED HEM FIR #2.
- BUILDER TO VERIFY CORROSION-RESISTANCE COMPATIBILITY OF HARDWARE & FASTENERS IN CONTACT w/ PRESERVATIVE-TREATED WOOD. CONTACT LUMBER & HARDWARE SUPPLIERS TO COORDINATE.
- ARCH/BUILDER TO VERIFY ALL DIMENSIONS

* 2018 IRC* - OUT #1281

HOLD-DOWN SCHEDULE

SYMBOL	SPECIFICATION
HD-1	SIMPSON STHD14 (R.I.) HOLD-DOWN
HD-5	SIMPSON CS16 STRAP TIE (14" END LENGTH)
HD-6	SIMPSON MSTC40 STRAP TIE (CENTER STRAP ON FLOOR SYSTEM U.N.O.)
HD-7	SIMPSON MSTC66 STRAP TIE (CENTER STRAP ON FLOOR SYSTEM U.N.O.)

MEANS & METHODS NOTES

THE STRUCTURE IS DESIGNED TO BE SELF SUPPORTING AND STABLE AFTER THE BUILDING IS FINISHED AND ALL PLAN, DETAIL, AND NOTE SPECIFICATIONS HAVE BEEN COMPLETED. IT IS THE CONTRACTOR'S SOLE RESPONSIBILITY TO DETERMINE THE ERECTION PROCEDURES AND SEQUENCE TO INSURE THE SAFETY OF THE BUILDING AND ITS COMPONENTS DURING CONSTRUCTION. THIS INCLUDES, BUT IS NOT LIMITED TO, THE ADDITION OF NECESSARY SHORING, SHEETING, TEMPORARY BRACING, GUYS, AND TIE-DOWNS. CONTRACTOR SHALL BE RESPONSIBLE FOR ALL SHORING AND BRACING REQUIRED TO STABILIZE AND PROTECT EXISTING AND ADJACENT STRUCTURES AND SYSTEMS DURING COURSE OF DEMOLITION AND CONSTRUCTION OF THE PROJECT.

STRUCTURAL DESIGN AND SPECIFICATIONS ASSUME THAT ALL SUPPORTING AND NON-SUPPORTING ELEMENTS IN CONTACT WITH FLOOR FRAMING ARE LEVEL, INCLUDING, BUT NOT LIMITED TO; FOUNDATIONS, SLABS ON GRADE, BEAMS, WALLS, AND NON-BEARING ELEMENTS. IT IS THE CONTRACTOR'S RESPONSIBILITY TO VERIFY LEVELNESS AND MAKE ADJUSTMENTS AS NECESSARY, INCLUDING CONSIDERATION OF THOSE AREAS THAT MAY BE WITHIN CONTRACTUAL, INDUSTRY, OR WARRANTY TOLERANCES.

ADDITIONAL NOTES FOR TRUSS & I-JOIST MANUFACTURER

ROOF TRUSS, FLOOR TRUSS AND ENGINEERED JOISTS SHALL BE DESIGNED TO MEET THE DIFFERENTIAL DEFLECTION CRITERIA BELOW, UNLESS NOTED OTHERWISE ON PLAN. MULHERN & KULP CANNOT BE HELD RESPONSIBLE FOR ANY STRUCTURAL ISSUES RELATED TO ANY BUILDING COMPONENT IF COMPONENT SHOP DRAWINGS ARE NOT SUBMITTED TO M&K FOR REVIEW PRIOR TO FABRICATION, DELIVERY, OR INSTALLATION.

TRUSSES SHALL BE DESIGNED SO THAT DIFFERENTIAL DEFLECTION BETWEEN ADJACENT PARALLEL TRUSSES OR GIRDER TRUSSES DOES NOT EXCEED THE FOLLOWING:

A. ROOF TRUSSES:
   1/4" DEAD LOAD
B. FLOOR TRUSSES, ATTIC TRUSSES, & I-JOISTS:
   1/8" DEAD LOAD
C. FLOOR TRUSSES & ATTIC TRUSSES ADJACENT TO FLOOR FRAMING BY OTHERS:
   LIMIT ABSOLUTE TRUSS DEFLECTION TO 3/16" DEAD LOAD. (NOT DIFFERENTIAL DEFLECTION)

LOADING AND DESIGN PARAMETERS

GRAVITY DESIGN LOADS:

DEAD LOAD (PSF):

ROOF TRUSS TOP CHORD	10
ROOF TRUSS BOTTOM CHORD	7
FLOOR TRUSSES:	15
FLOOR (SOLID SAWN):	10

LIVE LOAD (PSF):

ROOF :	20
RESIDENTIAL LIVING AREAS :	40
RESIDENTIAL SLEEPING AREAS :	30
BALCONY LIVE:	60

SNOW LOAD:

GROUND SNOW LOAD (P_g) (PSF) :	25
FLAT ROOF SNOW LOAD (P_f) (PSF) :	25
SNOW EXPOSURE FACTOR (C_e) :	0.9
SNOW LOAD IMPORTANCE FACTOR (I) :	1.0
THERMAL FACTOR (C_t) :	1.2

LATERAL DESIGN LOADS:

WIND LOAD: (IBC 1609)

SPEED (V_{ult}) (MPH) :	100
WIND RISK CATEGORY :	II
IMPORTANCE FACTOR (I_w) :	1.0
EXPOSURE CATEGORY :	C
INTERNAL PRESSURE COEFF. (GC_{pi}) :	±0.18
TOPOGRAPHIC FACTOR (K_{zt}) :	1.0

SEISMIC LOAD: (IBC 1613)

SEISMIC RISK CATEGORY :	II
SEISMIC IMPORTANCE FACTOR (I_e) :	1.0
MAPPED SPECTRAL RESPONSE :	
S_{DS}: 1.407	S_{D1}: 0.490
SITE CLASS :	D
SPECTRAL RESPONSE COEFF. :	
S_{DS}: 0.938	S_{D1}: 0.541
SEISMIC DESIGN CATEGORY:	D
BASIC SEISMIC-FORCE-RESISTING SYS :	LIGHT FRAMED WALLS w/WOOD STRUCTURAL PANELS
DESIGN BASE SHEAR (ULT.):	TRANS: 23k LONG: 23k
SEISMIC RESPONSE COEFF. (C_s) (ADDITION) :	TRANS: 0.144 LONG: 0.144
RESPONSE MODIFICATION FACTOR (R) :	TRANS: 6.5 LONG: 6.5
ANALYSIS PROCEDURE USED:	EQUIVALENT LATERAL FORCE

LATERAL BRACING NOTES

THIS HOME HAS BEEN ENGINEERED TO RESIST LATERAL FORCES RESULTING FROM:
100 MPH WIND SPEED, EXP. C
(ASCE 7-16 WIND MAP, PER IRC R301.2.1.1)
RISK CAT. 2 & SEISMIC CAT. D2.

110 MPH WIND IN 2018 IRC MAP

ENGINEERED DESIGN WAS COMPLETED PER 2018 IBC (SECTION 1609 & 1613) & ASCE 7-16, AS PERMITTED BY R301.1.3 OF THE 2018 IRC. ACCORDINGLY, THIS HOME, AS DOCUMENTED AND DETAILED HEREWITHIN, IS ADEQUATE TO RESIST THE CODE REQUIRED LATERAL FORCES, AND DOES NOT NEED TO CONFORM TO THE PRESCRIPTIVE PROVISIONS OF R602.10.

STANDARD EXTERIOR WALL SHEATHING SPECIFICATIONS

(INTERIOR WALL SPECIFICATION WHERE NOTED ON PLANS)

- 7/16" OSB OR 15/32" PLYWOOD:

  FASTEN SHEATHING w/ 2½"x0.131" NAILS @ 6"o.c. AT ALL SUPPORTED PANEL EDGES AND 12" O.C. IN THE PANEL FIELD. ALL SHEATHING SHEET PANEL EDGES SHALL OCCUR OVER WALL FRAMING MEMBERS OR 2x HORIZONTAL BLOCKING SHALL BE PROVIDED TO SUPPORT PANEL EDGE. ALL EXTERIOR WALLS SHALL BE CONSTRUCTED PER THIS SPECIFICATION U.N.O. ON PLANS.

3" o.c. EDGE NAILING

(WHERE NOTED ON PLANS)

- 7/16" OSB OR 15/32" PLYWOOD:

  ONLY AT LOCATIONS INDICATED ON PLANS - SHEATHE WALL SHOWN WITH 7/16" OSB. FASTEN SHEATHING w/ 2½"x0.131" NAILS @ 3" O.C. AT EDGES AND 12" O.C. AT CENTER. ALL SHEATHING SHEET PANEL EDGES SHALL OCCUR OVER WALL FRAMING MEMBERS OR 2x HORIZONTAL BLOCKING SHALL BE PROVIDED TO SUPPORT PANEL EDGE AND 3" O.C. FASTENING.

NOTES:

1. LATERAL ANALYSIS ASSUMES STUD SPACING @ 16" o.c.
2. ALL SHEAR WALLS SHALL HAVE DOUBLE TOP PLATES FASTENED TOGETHER w/ 3"x0.131" NAILS @ 8" O.C. USE (12)3½"x0.135" NAILS AT EACH LAP SPLICE, (6) EACH SIDE OF JOINT (TYP. U.N.O.)
3. ALL EXTERIOR WALLS ARE CONTINUOUSLY SHEATHED.
4. ALL INTERIOR SHEAR WALLS AND EXTERIOR WALLS ARE SHEATHED ABOVE AND BELOW OPENINGS.

LEGEND

- INTERIOR BEARING WALL
- BEARING WALL ABOVE (B.W.A.), OR SHEARWALL ABOVE (S.W.A.)
- BEAM / HEADER
- INTERIOR SHEAR WALL PANEL OR EXTERIOR SHEAR WALL w/ 3" o.c. EDGE NAILING
- AREA OF OVERFRAMING
- METAL HANGER
- INDICATES POST ABOVE. PROVIDE SOLID BLOCKING UNDER POST OR JAMB ABOVE.
- INDICATES HOLDOWN.

GENERAL STRUCTURAL NOTES

DESIGN PARAMETERS

- DESIGN IS BASED ON 2018 INTERNATIONAL RESIDENTIAL CODE & 2018 INTERNATIONAL BUILDING CODE
- WOOD FRAME ENGINEERING IS BASED ON NDS, "NATIONAL DESIGN SPECIFICATION FOR WOOD CONSTRUCTION" - LATEST EDITION.

GENERAL FRAMING

- EXTERIOR BEARING WALLS SHALL BE 2x4 OR 2x6 (AS SHOWN ON PLANS) @ 16" O.C. (w/ DOUBLE TOP PLATE) HEM FIR (HF) "STUD" GRADE LUMBER, OR BETTER, U.N.O.
- INTERIOR BEARING WALLS SHALL BE 2x4 OR 2x6 (AS SHOWN ON PLANS) @ 16" O.C. (w/ DOUBLE TOP PLATE) HEM FIR (HF) "STUD" GRADE LUMBER, OR BETTER, U.N.O.
- ALL NON-BEARING INTERIOR STUD WALLS SHALL BE CONSTRUCTED WITH 2x "STUD" GRADE MEMBERS SPACED @ 24" O.C. (MAX.)
- ALL WALLS TALLER THEN TYP. PLATE HEIGHT SHALL BE CONSIDERED BALLOON FRAMED & SHALL BE CONSTRUCTED FROM FLOOR TO UNDERSIDE OF FRAMING AT NEXT LEVEL. B.F. WALLS SHALL BE 2x4 OR 2x6 (AS SHOWN ON PLANS) HEM FIR (HF) #2 GRADE LUMBER, OR BETTER.
- ALL HEADERS SHALL BE SUPPORTED BY (1)2x JACK STUD & (1)2x KING STUD, MINIMUM.
  - THE NUMBER OF STUDS SPECIFIED AT A SUPPORT INDICATES THE NUMBER OF JACK STUDS REQUIRED, U.N.O..
- BUILT-UP POSTS SHALL BE 2x4 OR 2x6 HEM FIR (HF) "STUD" GRADE LUMBER, OR BETTER, U.N.O. & SOLID WOOD COLUMNS SHALL BE SPRUCE PINE FIR (SPF) #2 GRADE LUMBER, OR BETTER, U.N.O.
- ALL 2x6 AND LARGER SOLID SAWN BEAMS/HEADERS SHALL BE HEM FIR #2 (HF #2) OR BETTER. ALL 4x6 AND LARGER SOLID SAWN LUMBER SHALL BE DOUG FIR #2 (DF #2) OR BETTER.
- ALL FRAMING LUMBER SHALL BE KILN DRIED TO 15% MC (KD-15).
- ALL TYP. NAIL FASTENER REQUIREMENTS ARE NOTED IN GENERAL NOTES, IN DETAILS, OR ON PLANS. ALL NAILS SPECIFIED ARE MIN DIAMETER AND LENGTH REQUIRED FOR CONNECTION. ALL HANGER NAILS SHALL BE INSTALLED PER MANUFACTURER'S REQUIREMENTS FOR MAX CHARTED CAPACITY. NOTE: HANGERS USE COMMON NAIL DIAMETERS NOT TYPICAL FRAMING GUN NAILS.
- FASTEN ALL BEAMS TO COLUMNS, OR FLUSH BEAMS TO SUPPORTING BEAMS, w/ (4) 3"x0.131" TOENAILS (MIN.), TYP. U.N.O.
- PROVIDE SOLID BLOCKING IN FLOOR SYSTEM UNDER ALL POSTS & HOLD-DOWNS CONTINUOUS TO FOUNDATION/BEARING. BLOCKING TO MATCH POST ABOVE.
- ENGINEERED LUMBER TO MEET OR EXCEED THE FOLLOWING:
  - LSL MEMBERS - Fb=2325 PSI; Fv=310 PSI; E=1.55x10^6 PSI
  - LVL MEMBERS - Fb=2600 PSI; Fv=285 PSI; E=2.0x10^6 PSI
  - GLB MEMBERS - Fb(+)=2400 PSI; Fb(-)=1850 PSI; Fv=265 PSI; E=1.8x10^6 PSI; DF/DF; 24F-V4 (U.N.O.)
- ENGINEERED LUMBER POSTS TO MEET OR EXCEED THE FOLLOWING:
  - LVL MEMBERS - Fb=2400 PSI; Fc⊥=2500 PSI; E=1.8x10^6 PSI
- FACE NAIL MULTI-PLY 2x BEAMS & HEADERS W/ 3-ROWS OF 3"x0.131" NAILS (MIN.) @ 12" O.C. STAGGERED, APPLY NAILING FROM BOTH FACES @ 3-PLY OR MORE CONDITIONS. UTILIZE 2 ROWS OF NAILS FOR 2x6 & 2x8 MEMBERS.
- ALL MEMBERS SPECIFIED AS MULTI-PLY 1¾" SHALL BE FASTENED TOGETHER PER MANUFACTURER. EQUIVALENT WIDTH SOLID MATERIAL MAY BE USED AS EQUAL.
- FASTEN 2x WOOD PLATES TO TOP FLANGE OF STEEL BEAMS w/P.A.F.s ('HILTI' X-U PINS OR EQUAL (0.157" DIA. x 2" LONG MIN.)) @ 16" O.C. STAGGERED, OR 1/2" DIA. BOLTS @ 48" O.C., STAGGERED.
- REFER TO IRC FASTENING SCHEDULE TABLE R602.3(1) FOR ALL CONNECTIONS, TYP. U.N.O.

FLOOR FRAMING

- I-JOISTS/TRUSSES SHALL BE DESIGNED BY MANUF. TO MEET OR EXCEED L/480 LIVE LOAD DEFLECTION CRITERIA AND SHALL RUN CONTINUOUS OVER SUPPORTS WHEREVER POSSIBLE. ALL LOADS SHOWN ON PLAN FOR MANUF. DESIGNS ARE ASD LEVEL LOADS, U.N.O. (EXCLUDES STONE/MARBLE OR WET BED CONSTRUCTED FLOORS - CONTACT M&K FOR EXCLUDED DESIGNS).
- ALL METAL I-JOIST/TRUSS HANGERS SHALL BE SPECIFIED BY I-JOIST/TRUSS MANUFACTURER, UNLESS OTHERWISE NOTED.
- I-JOIST/TRUSS SHOP DRAWINGS SHALL BE SUBMITTED TO ARCHITECT AND ENGINEER FOR REVIEW AND APPROVAL PRIOR TO FABRICATION OR DELIVERY.
- 2x FLOOR JOISTS HAVE BEEN DESIGNED TO MEET OR EXCEED L/360 LIVE LOAD DEFLECTION CRITERIA.
- TYPICAL 2x JOIST HANGERS (U.N.O. ON PLANS).
  SINGLE PLY: SIMPSON LUS210
  DOUBLES: SIMPSON LUS210-2
- FLOOR SHEATHING SHALL BE 23/32" A.P.A. RATED 'STURD-I-FLOOR' 24" O.C., EXPOSURE 1 (OR APPROVED EQUAL) WITH TONGUE AND GROOVE EDGES. FASTEN TO FRAMING MEMBERS W/ GLUE AND 2 ½" x 0.131" NAILS @ 6"o.c. @ PANEL EDGES & @ 12"o.c. FIELD.
- ALL FLUSH CONNECTIONS SHALL BE CONNECTED WITH HANGER APPROPRIATE FOR MEMBER SIZE, U.N.O.
- FASTEN HANGERS TO SINGLE PLY FLUSH BEAMS w/ 1½" LONG NAILS.

ROOF FRAMING

- FASTEN EACH ROOF TRUSS TO TOP PLATE W/ (3) 3"x0.131" TOENAILS (MIN) & (1) 'SIMPSON' H2.5T CLIP @ ALL BEARING POINTS. PROVIDE (2) 'SIMPSON' H2.5T CLIPS AT 2-PLY GIRDER TRUSSES & 3-PLY GIRDER TRUSSES AT ALL BEARING POINTS.
- FASTEN EACH ROOF RAFTER TO TOP PLATE WITH (1) 'SIMPSON' H2.5T CLIP. PROVIDE (2) 'SIMPSON' H2.5T CLIPS AT FLUSH BEAMS IN THE ROOF - AT ALL BEARING POINTS.
- ROOF SHEATHING SHALL BE 7/16" A.P.A. RATED SHEATHING 24/16 EXPOSURE 1 (OR APPROVED EQUAL). FASTEN TO FRAMING MEMBERS w/ 2 ½" x 0.131" NAILS @ 6"o.c. AT PANEL EDGES & @ 12" O.C. AT INTERMEDIATE SUPPORTS. ROOF SHEATHING SHALL EXTEND BELOW ALL INSTANCES OF OVERFRAMING. BLOCKING SHALL BE INSTALLED AS REQUIRED TO LIMIT ROOF SHEATHING SPANS TO 24" MAX.
- WITHIN 48" OF ALL ROOF EDGES, RIDGES, & HIPS FASTEN ROOF SHEATHING FIELDS PER EDGE NAILING SPEC.
- ALL METAL HANGERS SHALL BE SPECIFIED BY THE TRUSS MANUFACTURER, UNLESS OTHERWISE NOTED.
- ROOF TRUSS SHOP DRAWINGS SHALL BE SUBMITTED TO ARCHITECT AND ENGINEER FOR REVIEW AND APPROVAL PRIOR TO FABRICATION OR DELIVERY.
- ROOF TRUSS SHOP DRAWINGS & CALCULATIONS SHALL BE PREPARED BY A WASHINGTON STATE LICENSED ENGINEER AND SHALL BE DESIGNED FOR UNBALANCED SNOW LOADING PER ASCE 7-16, SECTION 7.6.
- ERECT AND INSTALL ROOF TRUSSES PER WTCA & TPI'S BCSI 1-08 "GUIDE TO GOOD PRACTICE FOR HANDLING, INSTALLING & BRACING OF METAL PLATE CONNECTED WOOD TRUSSES."
- FASTEN OVER-FRAMED TRUSS SETS TO TRUSSES BELOW w/ (2) 3"x0.131" TOENAILS AT EA. TRUSS.
- SUPPORT PORCH & SHORT SPAN ROOF TRUSSES (UP TO 6' TRIB.) w/2x6 LEDGER FASTENED TO FRAMING w/(3) 3"x0.131" NAILS @ 16" o.c.
- FASTEN ALL INTERIOR NON-BEARING PARTITION WALLS TO TRUSS BOTTOM CHORD ABOVE WITH SIMPSON STC CLIPS AT 24" o.c. MAX. PROVIDE BLOCKING BETWEEN THE TRUSS BOTTOM CHORDS AS REQUIRED FOR THE PARALLEL CONDITIONS.

* 2018 IRC* - OUT #1281

seal:

NICHOLAS J. MARTINGNETTI
STATE OF WASHINGTON
56478
REGISTERED
PROFESSIONAL ENGINEER

© copyright : MULHERN & KULP Structural Engineering, Inc.

MULHERN+KULP
RESIDENTIAL STRUCTURAL ENGINEERING
7220 Trade Street, Suite 350, San Diego, CA 92121
p 619-630-0010 • mulhernkulp.com

M&K project number: 203-22010

project mgr: NJM
drawn by: LGH
issue date: 05-27-22

REVISIONS:

date:	initial:
06/20/22 ARCH REVISIONS	LGH

ARCHITECTURAL INNOVATIONS

STRUCTURAL NOTES
3036 67TH AVE SE
MERCER ISLAND, WASHINGTON

sheet: S-0.0

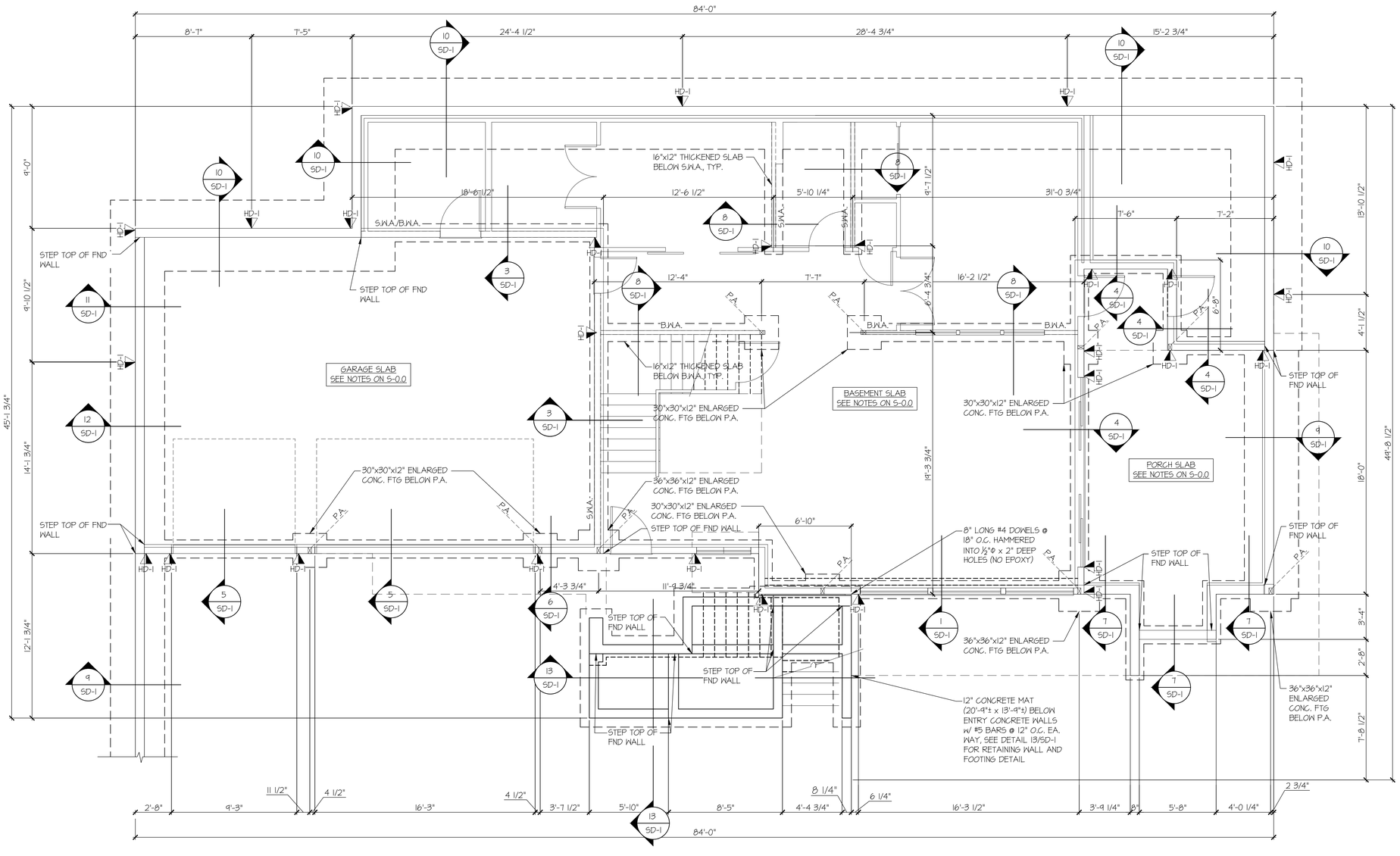
REFER TO S-0.0 FOR TYPICAL STRUCTURAL NOTES & SCHEDULES

LEGEND

- INTERIOR BEARING WALL
- BEARING WALL ABOVE (B.W.A.), OR SHEARWALL ABOVE (S.W.A.)
- BEAM / HEADER
- INTERIOR SHEAR WALL PANEL OR EXTERIOR SHEAR WALL w/ 3" o.c. EDGE NAILING
- AREA OF OVERFRAMING
- JL METAL HANGER
- INDICATES POST ABOVE. PROVIDE SOLID BLOCKING UNDER POST OR JAMB ABOVE.
- INDICATES HOLDOWN.

HOLD-DOWN SCHEDULE

SYMBOL	SPECIFICATION
HD-1	SIMPSON STHD14 (R.I) HOLD-DOWN
HD-5	SIMPSON CS16 STRAP TIE (14" END LENGTH)
HD-6	SIMPSON MSTC40 STRAP TIE (CENTER STRAP ON FLOOR SYSTEM U.N.O.)
HD-7	SIMPSON MSTC66 STRAP TIE (CENTER STRAP ON FLOOR SYSTEM U.N.O.)



1 FOUNDATION PLAN
SCALE: 1/4"=1'-0"

seal:

NICHOLAS J. MARTINETTI
STATE OF WASHINGTON
56478
REGISTERED
PROFESSIONAL ENGINEER

© copyright : MULHERN & KULP Structural Engineering, Inc.

MULHERN+KULP
RESIDENTIAL STRUCTURAL ENGINEERING
7220 Trade Street, Suite 350, San Diego, CA 92121
p 619-630-0010 • mulhernkulp.com

M&K project number: 203-22010

project mgr: NJM
drawn by: LGH
issue date: 05-27-22

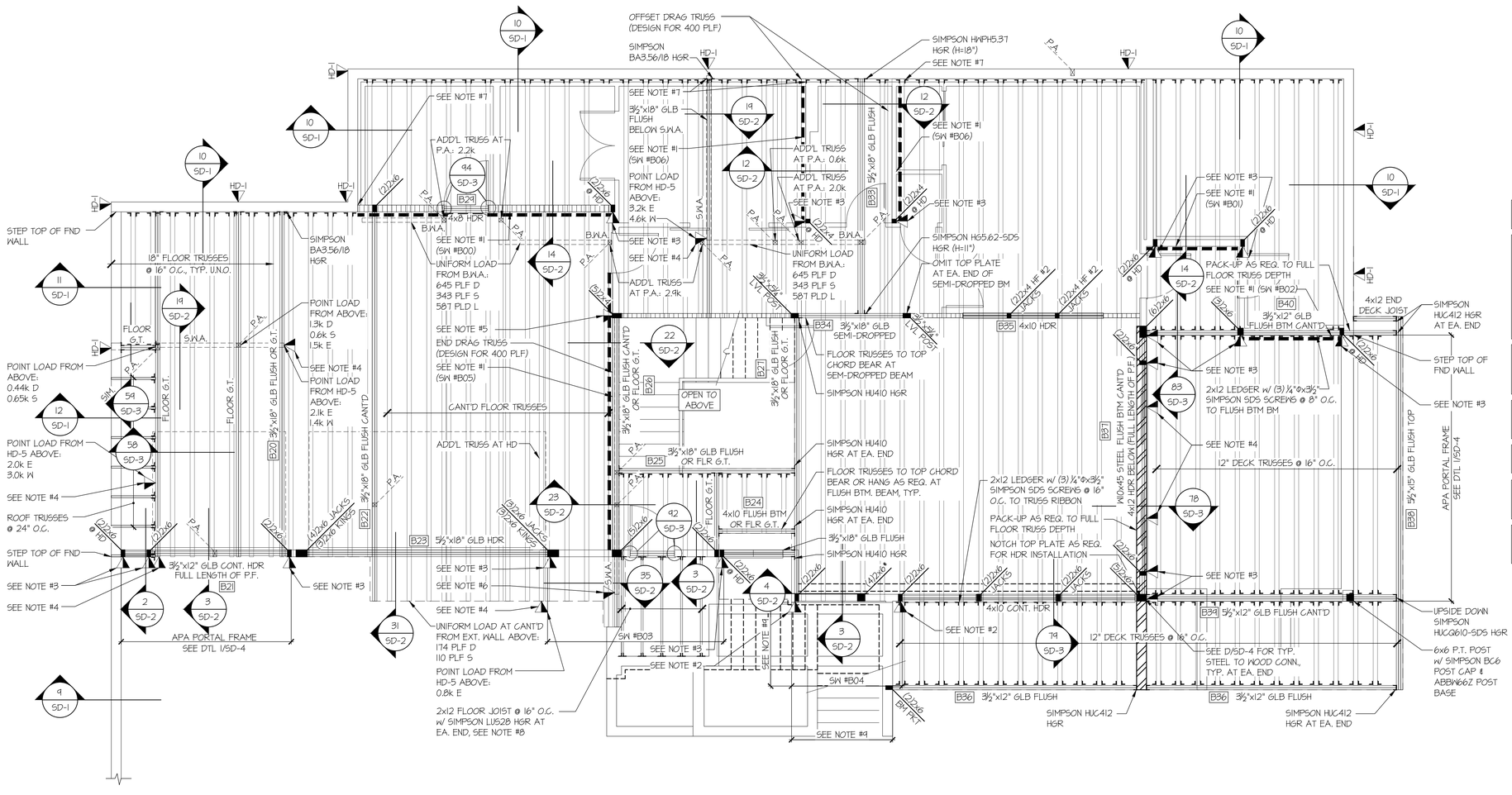
REVISIONS:

date:	initial:
06/20/22 ARCH REVISIONS	LGH

ARCHITECTURAL INNOVATIONS

FOUNDATION PLAN
3036 67TH AVE SE
MERCER ISLAND, WASHINGTON

sheet: S-1.0



MAIN FLOOR FRAMING PLAN

SCALE: 1/4"=1'-0"

REFER TO S-0.0 FOR TYPICAL STRUCTURAL NOTES & SCHEDULES

LEGEND

- INTERIOR BEARING WALL
- BEARING WALL ABOVE (B.W.A.), OR SHEARWALL ABOVE (S.W.A.)
- BEAM / HEADER
- INTERIOR SHEAR WALL PANEL OR EXTERIOR SHEAR WALL w/ 3" o.c. EDGE NAILING
- AREA OF OVERFRAMING
- JL METAL HANGER
- INDICATES POST ABOVE. PROVIDE SOLID BLOCKING UNDER POST OR JAMB ABOVE.
- INDICATES HOLDOWN.

HOLD-DOWN SCHEDULE

SYMBOL	SPECIFICATION
HD-1	SIMPSON STHD14 (R.I) HOLD-DOWN
HD-5	SIMPSON CS16 STRAP TIE (14" END LENGTH)
HD-6	SIMPSON MSTC40 STRAP TIE (CENTER STRAP ON FLOOR SYSTEM U.N.O.)
HD-7	SIMPSON MSTC66 STRAP TIE (CENTER STRAP ON FLOOR SYSTEM U.N.O.)

@ STEEL BEAMS: PROVIDE SOLID 2x/LVL WEB PACKOUT FASTENED TO WEB W/ ½" DIA. THRU BOLTS @ 24"O.C. STAGGERED. ALSO, PROVIDE 2x TOP PLATE FASTENED W/ P.A.F.'s (HILTI X-U PINS OR EQUAL) @ 16" O.C. STAGGERED, OR ½" DIA. BOLTS @ 48" O.C., STAGGERED.

NOTE #1: PROVIDE ⅞" OSB/PLYWOOD SHEATHING AND FASTEN 3" O.C. EDGE NAILING (SEE NOTES ON S-0.0)

NOTE #2: HD-5 FROM ABOVE TO TOP OF WALL. HD-1 AT BASE OF WALL TO FOUNDATION BELOW.

NOTE #3: HD-1 AT BASE OF WALL TO FOUNDATION BELOW.

NOTE #4: HD-5 FROM ABOVE. WRAP END LENGTH AROUND BEAM/G.T. AS REQ.

NOTE #5: HD-6 FROM ABOVE TO TOP OF WALL. HD-1 AT BASE OF WALL TO FOUNDATION BELOW.

NOTE #6: HD-6 FROM ABOVE. WRAP END LENGTH AROUND BEAM/G.T. AS REQ.

NOTE #7: FASTEN END STUDS TO FND WALL w/ ¼"Øx6" SIMPSON TITEN HD's @ 24" O.C.

NOTE #8: PROVIDE 2x12 P.T. LEDGER w/ (3) ¼"Øx3½" SIMPSON SDS SCREWS @ 16" O.C. TO RIM & (2) ¼"Øx6" SIMPSON TITEN HD's @ 24" O.C. TO FND WALL

NOTE #9: 2x6 B.F. H.F. #2 STUDS @ 16" O.C.

seal:

NICHOLAS J. MARTINGNETTI · STATE OF WASHINGTON · 56478 · REGISTERED PROFESSIONAL ENGINEER

© copyright : MULHERN & KULP Structural Engineering, Inc.

MULHERN+KULP
RESIDENTIAL STRUCTURAL ENGINEERING
7220 Trade Street, Suite 350, San Diego, CA 92121
p (619) 630-0010 • mulhernkulp.com

M&K project number: 203-22010

project mgr: NJM
drawn by: LGH
issue date: 05-27-22

REVISIONS:

date:	initial:
06/20/22 ARCH REVISIONS	LGH

ARCHITECTURAL INNOVATIONS

MAIN FLOOR FRAMING PLAN

3036 67TH AVE SE
MERCER ISLAND, WASHINGTON

sheet: S-1.1

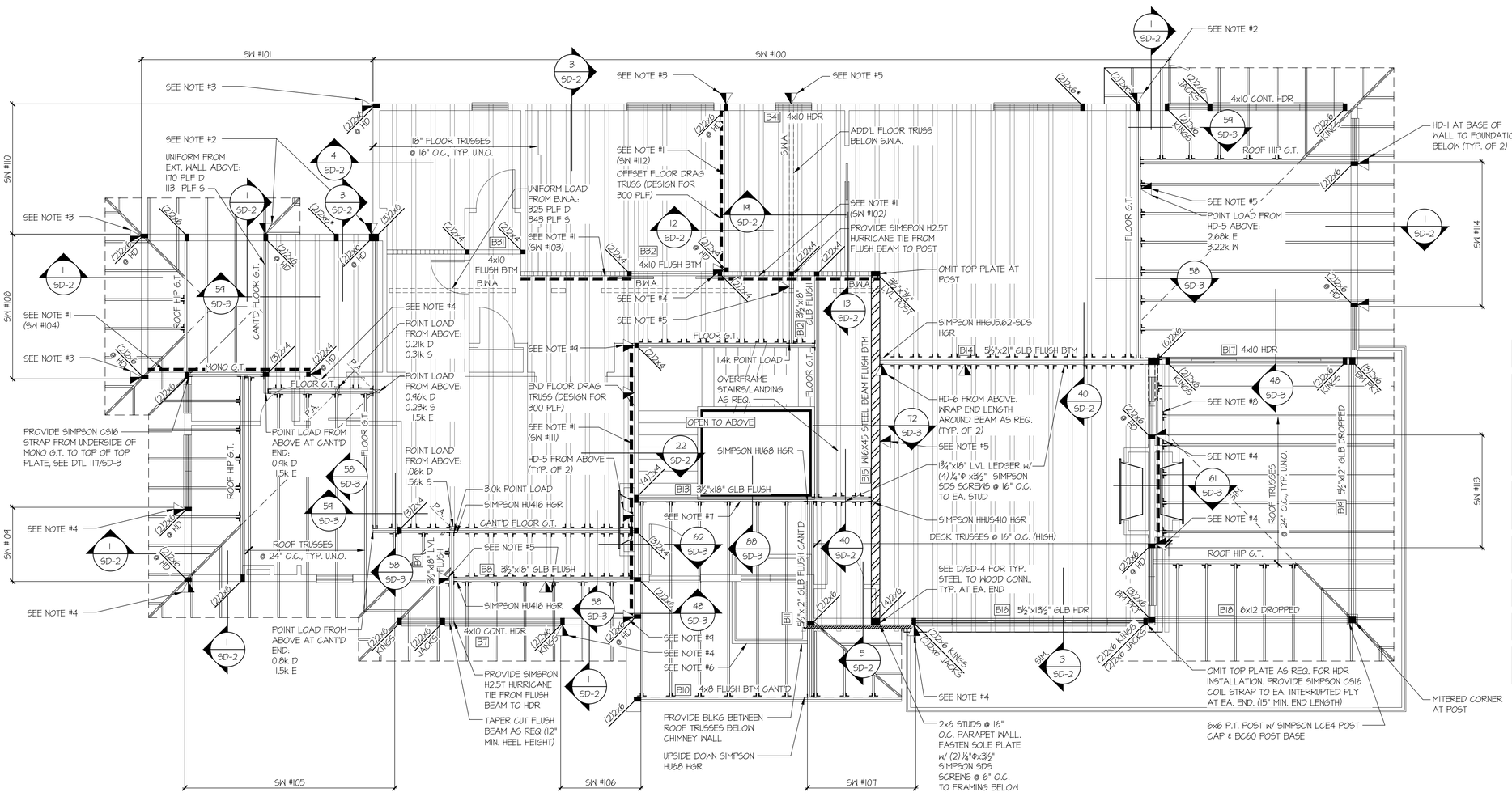
REFER TO S-0.0 FOR TYPICAL STRUCTURAL NOTES & SCHEDULES

LEGEND

- INTERIOR BEARING WALL
- BEARING WALL ABOVE (B.W.A.), OR SHEARWALL ABOVE (S.W.A.)
- BEAM / HEADER
- INTERIOR SHEAR WALL PANEL OR EXTERIOR SHEAR WALL w/ 3" o.c. EDGE NAILING
- AREA OF OVERFRAMING
- JL METAL HANGER
- ✳ INDICATES POST ABOVE. PROVIDE SOLID BLOCKING UNDER POST OR JAMB ABOVE.
- INDICATES HOLDOWN.

HOLD-DOWN SCHEDULE

SYMBOL	SPECIFICATION
HD-1	SIMPSON STHD14 (R.L) HOLD-DOWN
HD-5	SIMPSON CS16 STRAP TIE (14" END LENGTH)
HD-6	SIMPSON MSTC40 STRAP TIE (CENTER STRAP ON FLOOR SYSTEM U.N.O.)
HD-7	SIMPSON MSTC66 STRAP TIE (CENTER STRAP ON FLOOR SYSTEM U.N.O.)



4x10 HDR @ ALL EXT. OPENINGS (TYP. U.N.O.) B30

@ STEEL BEAMS: PROVIDE SOLID 2x/LVL WEB PACKOUT FASTENED TO WEB w/ ½" DIA. THRU BOLTS @ 24"o.c. STAGGERED, ALSO, PROVIDE 2x TOP PLATE FASTENED w/ P.A.F.'s (HILTI X-U PINS OR EQUAL) @ 16" O.C. STAGGERED, OR ½" DIA. BOLTS @ 48" O.C., STAGGERED.

NOTE #1: PROVIDE 7/16" OSB/PLYWOOD SHEATHING AND FASTEN PER TYP. EXT. SHTG SPECS (SEE NOTES ON S-0.0)

NOTE #2: HD-5 FROM ABOVE TO TOP OF WALL. HD-1 AT BASE OF WALL TO FOUNDATION BELOW.

NOTE #3: HD-1 AT BASE OF WALL TO FOUNDATION BELOW.

NOTE #4: HD-5 AT BASE OF WALL TO FRAMING BELOW.

NOTE #5: HD-5 FROM ABOVE. WRAP END LENGTH AROUND BEAM/G.T. AS REQ.

NOTE #6: PROVIDE 2x6 STUDS @ 16" O.C. FROM TOP OF ROOF SHEATHING TO TOP OF CHIMNEY WALL. FASTEN SOLE PLATE w/ (2)¼"ø x 3½" SIMPSON SDS SCREWS @ 6" O.C. TO ROOF TRUSSES/ BLKG, TYP. AT CHIMNEY WALLS.

NOTE #7: 2x6 LEDGER w/ (3) 3"x0.131" NAILS @ 16" O.C. TO GIRDER TRUSS/FLUSH BEAM

NOTE #8: 2x6 LEDGER w/ (4) 3"x0.131" NAILS @ 16" O.C. TO EA. STUD

NOTE #9: HD-6 AT BASE OF WALL TO FRAMING BELOW.

1 UPPER FLOOR FRAMING PLAN
SCALE: 1/4"=1'-0"

seal:
NICHOLAS J. MARTINETTI
STATE OF WASHINGTON
56478
REGISTERED
PROFESSIONAL ENGINEER

© copyright : MULHERN & KULP Structural Engineering, Inc.

MULHERN+KULP
RESIDENTIAL STRUCTURAL ENGINEERING
7220 Trade Street, Suite 350, San Diego, CA 92121
p 619-630-0010 • mulhernkulp.com

M&K project number: 203-22010

project mgr:	NJM
drawn by:	LGH
issue date:	05-27-22

REVISIONS:

date:	initial:
06/20/22 ARCH REVISIONS	LGH

ARCHITECTURAL INNOVATIONS

UPPER FLOOR FRMG PLAN
3036 67TH AVE SE
MERCER ISLAND, WASHINGTON

sheet: S-2.0

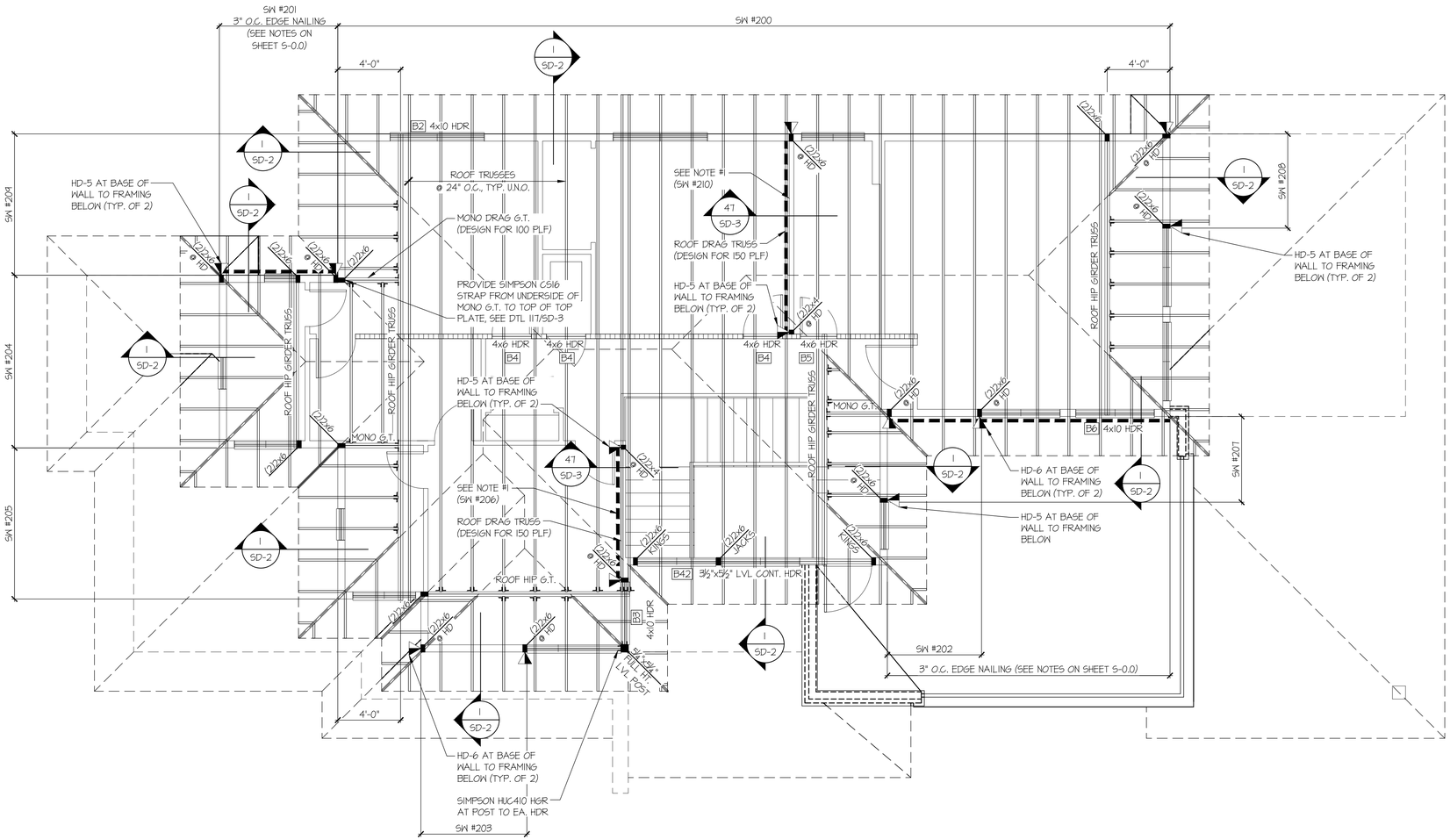
REFER TO S-0.0 FOR TYPICAL STRUCTURAL NOTES & SCHEDULES

LEGEND

- INTERIOR BEARING WALL
- BEARING WALL ABOVE (B.W.A.), OR SHEARWALL ABOVE (S.W.A.)
- BEAM / HEADER
- INTERIOR SHEAR WALL PANEL OR EXTERIOR SHEAR WALL w/ 3" o.c. EDGE NAILING
- AREA OF OVERFRAMING
- METAL HANGER
- INDICATES POST ABOVE. PROVIDE SOLID BLOCKING UNDER POST OR JAMB ABOVE.
- INDICATES HOLDOWN.

HOLD-DOWN SCHEDULE

SYMBOL	SPECIFICATION
HD-1	SIMPSON STHD14 (R.L) HOLD-DOWN
HD-5	SIMPSON CS16 STRAP TIE (14" END LENGTH)
HD-6	SIMPSON MSTC40 STRAP TIE (CENTER STRAP ON FLOOR SYSTEM U.N.O.)
HD-7	SIMPSON MSTC66 STRAP TIE (CENTER STRAP ON FLOOR SYSTEM U.N.O.)



4x10 HDR @ ALL EXT. OPENINGS (TYP. U.N.O.) B1

NOTE #1: PROVIDE ⅞" OSB/PLYWOOD SHEATHING AND FASTEN PER TYP. EXT. SHTG SPECS (SEE NOTES ON S-0.0)

ROOF FRAMING PLAN

SCALE: 1/4"=1'-0"

seal:

NICHOLAS J. MARTINGNETTI STATE OF WASHINGTON 56478 REGISTERED PROFESSIONAL ENGINEER

© copyright : MULHERN & KULP Structural Engineering, Inc.

MULHERN+KULP
RESIDENTIAL STRUCTURAL ENGINEERING
7220 Trade Street, Suite 350, San Diego, CA 92121
p 619-850-0010 • mulhernkulp.com

M&K project number: 203-22010

project mgr: NJM
drawn by: LGH
issue date: 05-27-22

REVISIONS:

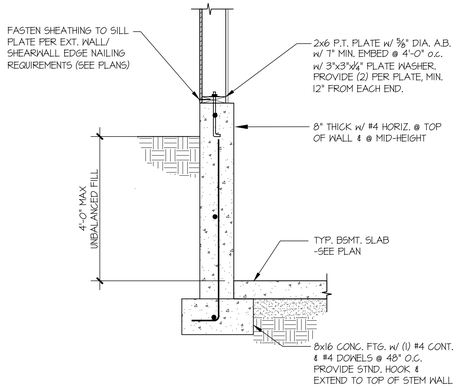
date:	initial:
06/20/22 ARCH REVISIONS	LGH

ARCHITECTURAL INNOVATIONS

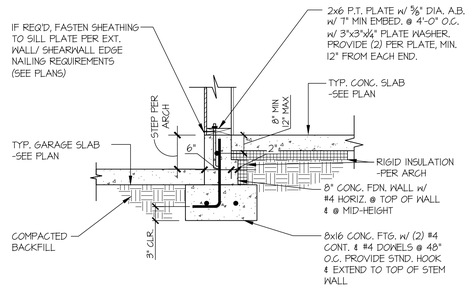
ROOF FRAMING PLAN

3036 67TH AVE SE
MERCER ISLAND, WASHINGTON

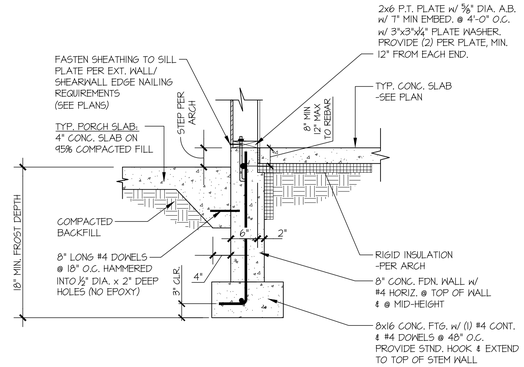
sheet: S-3.0



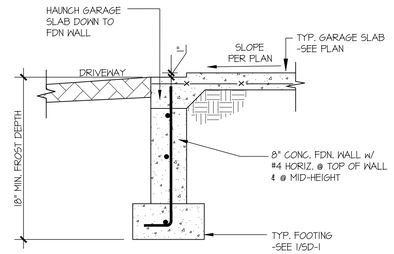
1 SECTION
SCALE: 3/4"=1'-0"



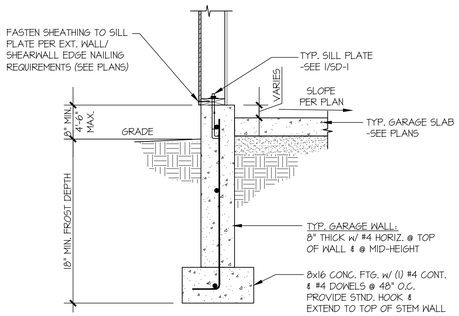
3 TYPICAL SLAB ON GRADE FOOTING @ GARAGE
SCALE: 3/4"=1'-0"



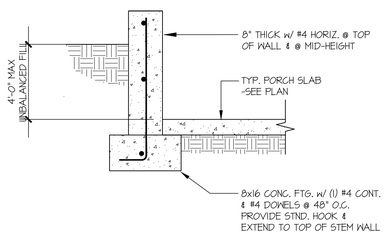
4 TYPICAL SLAB ON GRADE PERIMETER FOOTING @ PORCH SLAB
SCALE: 3/4"=1'-0"



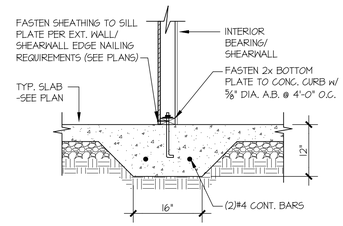
5 TYPICAL CONCRETE FOOTING @ GARAGE DOOR OPENING
SCALE: 3/4"=1'-0"



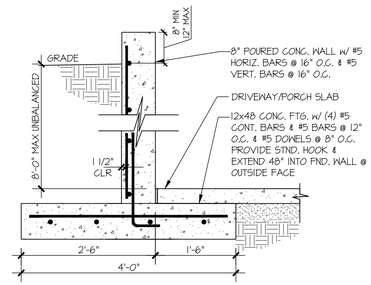
6 TYPICAL EXT. GARAGE FOUNDATION
SCALE: 3/4"=1'-0"



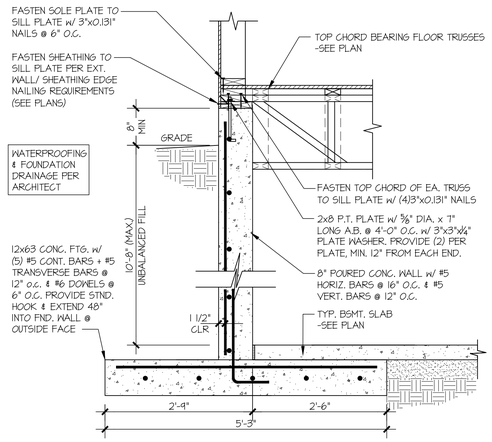
7 SECTION
SCALE: 3/4"=1'-0"



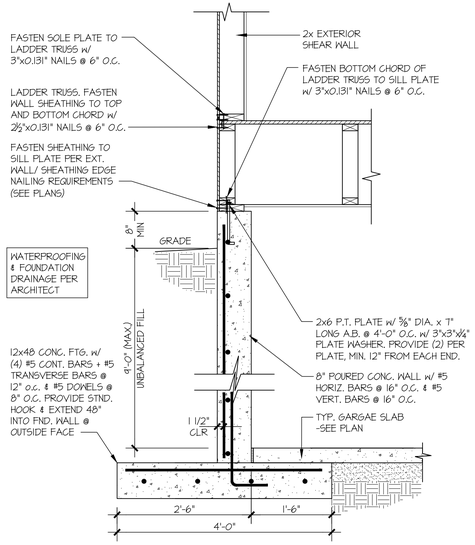
TYPICAL THICKENED SLAB @ INTERIOR BEARING WALL
8 SCALE: 3/4"=1'-0"



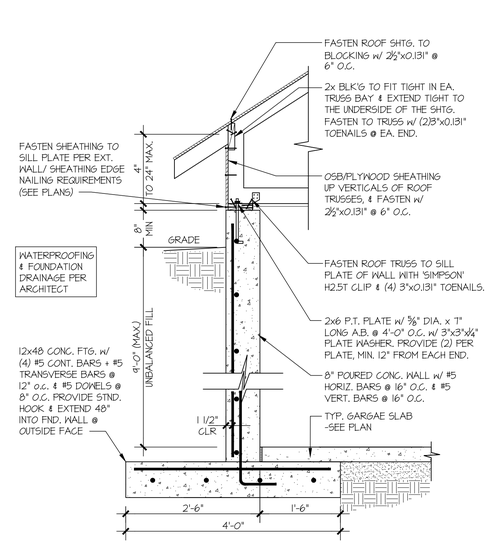
9 SITE RETAINING WALL
SCALE: 3/4"=1'-0"



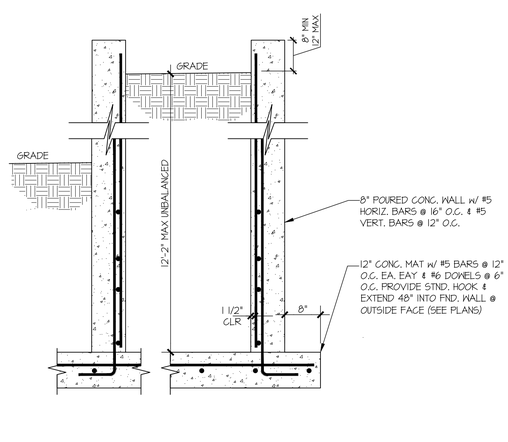
10 BASEMENT FOUNDATION WALL
SCALE: 3/4"=1'-0"



11 GARAGE FOUNDATION WALL
SCALE: 3/4"=1'-0"



12 GARAGE FOUNDATION WALL
SCALE: 3/4"=1'-0"



13 ENTRY RETAINING WALL
SCALE: 3/4"=1'-0"

seal:

NICHOLAS J. MARTIGNETTI
STATE OF WASHINGTON
56478
REGISTERED
PROFESSIONAL ENGINEER

© copyright : MULHERN & KULP
Structural Engineering, Inc.

MULHERN+KULP
RESIDENTIAL STRUCTURAL ENGINEERING
7220 Trade Street, Suite 350, San Diego, CA 92121
p (619) 630-0010 • mulhernkulp.com

M&K project number: 203-22010

project mgr: NJM
drawn by: LGH
issue date: 05-27-22

REVISIONS:

date:	initial:
06/20/22 ARCH REVISIONS	LGH

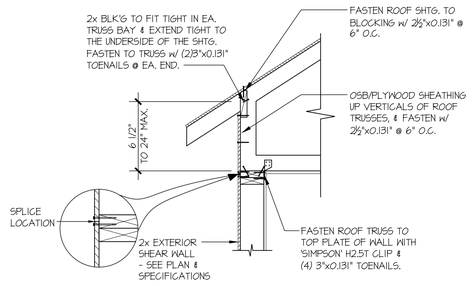
ARCHITECTURAL INNOVATIONS

FOUNDATION DETAILS

3036 67TH AVE SE
MERCER ISLAND, WASHINGTON

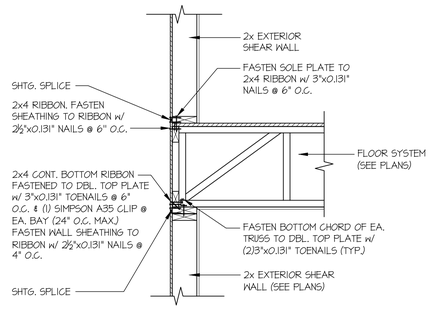
sheet:

SD-1



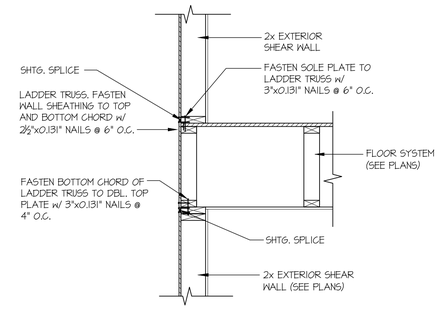
TYPICAL SHEAR TRANSFER DETAIL @ RAISED HEEL TRUSS

1 SCALE: 3/4"=1'-0" HEEL HEIGHT UP TO 24" MAX.



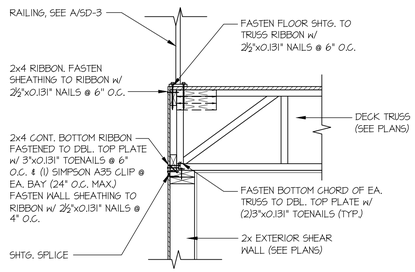
TYPICAL SHEAR TRANSFER DETAIL BETWEEN FLOORS @ EXTERIOR WALL

3 SCALE: 3/4"=1'-0" PERPENDICULAR FRAMING



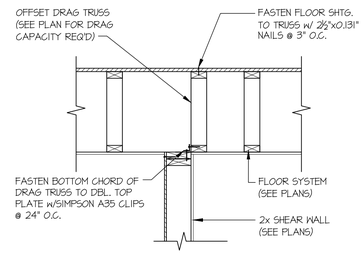
TYPICAL SHEAR TRANSFER DETAIL BETWEEN FLOORS @ EXTERIOR WALL

4 SCALE: 3/4"=1'-0" PARALLEL FRAMING



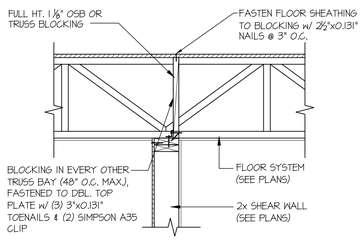
TYPICAL SHEAR TRANSFER DETAIL BETWEEN DECK @ EXTERIOR WALL

5 SCALE: 3/4"=1'-0" PERPENDICULAR FRAMING



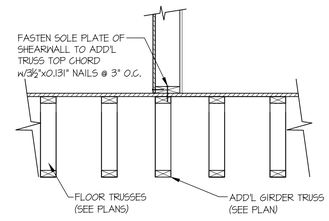
SHEAR TRANSFER DETAIL @ SHEAR WALL BELOW

12 SCALE: 3/4"=1'-0"



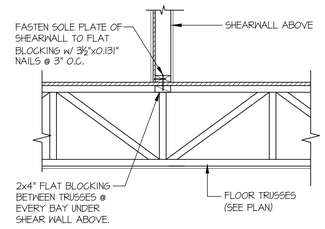
SHEAR TRANSFER DETAIL @ SHEAR WALL BELOW

14 SCALE: 3/4"=1'-0"



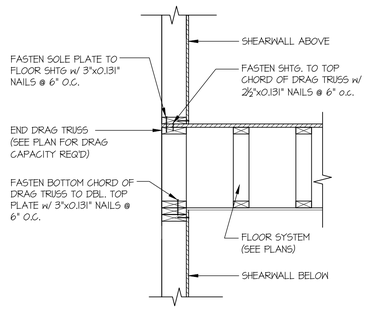
SHEAR TRANSFER DETAIL @ INTERIOR SHEARWALL ABOVE

19 SCALE: 3/4"=1'-0" PARALLEL FRAMING



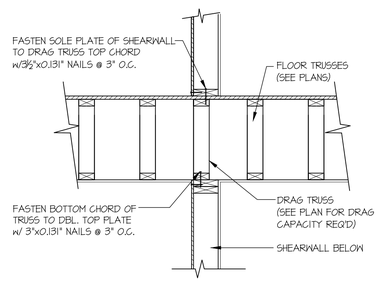
SHEAR TRANSFER DETAIL @ INTERIOR SHEAR WALL

20 SCALE: 3/4"=1'-0" PERPENDICULAR FRAMING



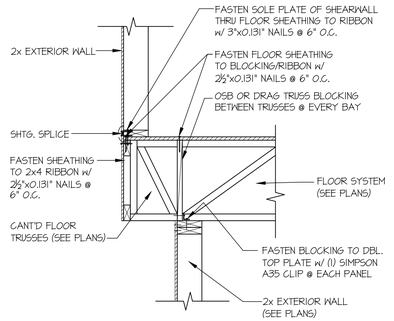
TYPICAL SHEAR TRANSFER DETAIL BETWEEN FLOORS @ INTERIOR WALL

22 SCALE: 3/4"=1'-0"



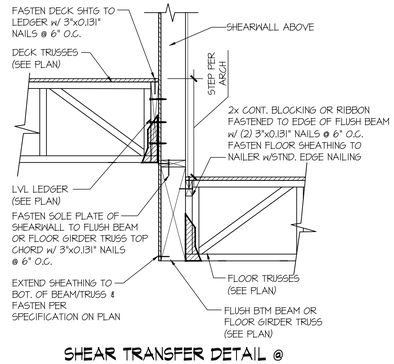
SHEAR TRANSFER DETAIL @ INTERIOR SHEAR WALL

23 SCALE: 3/4"=1'-0"



SHEAR TRANSFER DETAIL BETWEEN FLOORS @ CANT'D EXT. WALL

31 SCALE: 3/4"=1'-0"



SHEAR TRANSFER DETAIL @ EXTERIOR SHEARWALL ABOVE

40 SCALE: 3/4"=1'-0"

seal:

NICHOLAS J. MARTINGNETTI
STATE OF WASHINGTON
56478
REGISTERED
PROFESSIONAL ENGINEER

© copyright : MULHERN & KULP Structural Engineering, Inc.

MULHERN+KULP
RESIDENTIAL STRUCTURAL ENGINEERING
7220 Trade Street, Suite 350, San Diego, CA 92121
p 619-630-0010 • mulhernkulp.com

M&K project number: 203-22010

project mgr: NJM
drawn by: LGH
issue date: 05-27-22

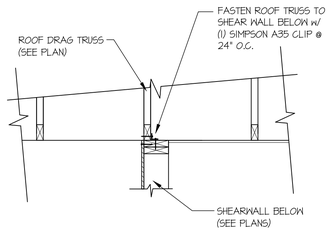
REVISIONS:

date:	initial:
06/20/22 ARCH REVISIONS	LGH

ARCHITECTURAL INNOVATIONS

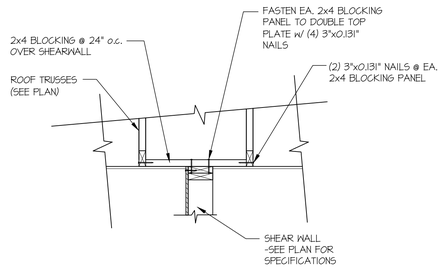
STRUCTURAL DETAILS
3036 67TH AVE SE
MERCER ISLAND, WASHINGTON

sheet: SD-2



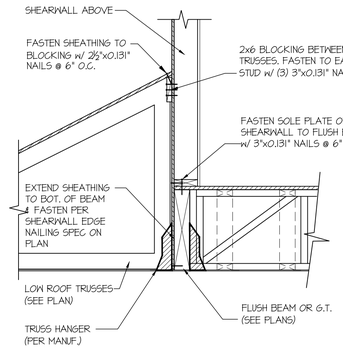
47 SHEAR TRANSFER DETAIL @ INTERIOR SHEARWALL BELOW

SCALE: 3/4"=1'-0"



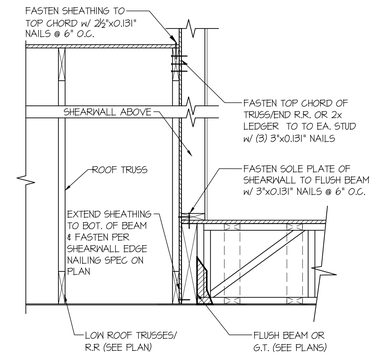
48 SHEAR TRANSFER DETAIL @ INTERIOR SHEARWALL BELOW

SCALE: 3/4"=1'-0"



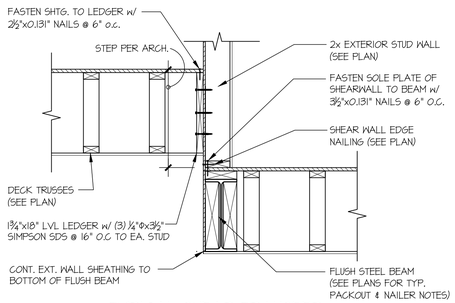
58 SHEAR TRANSFER DETAIL @ EXTERIOR SHEARWALL ABOVE

SCALE: 3/4"=1'-0"



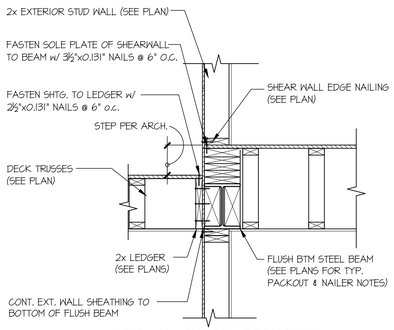
59 SHEAR TRANSFER DETAIL @ EXTERIOR SHEARWALL ABOVE

SCALE: 3/4"=1'-0"



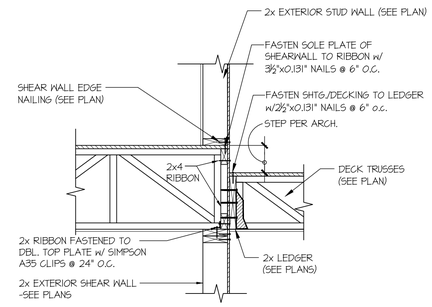
72 TYPICAL SHEAR TRANSFER DETAIL @ EXT. DECK FRAMING

SCALE: 3/4"=1'-0"



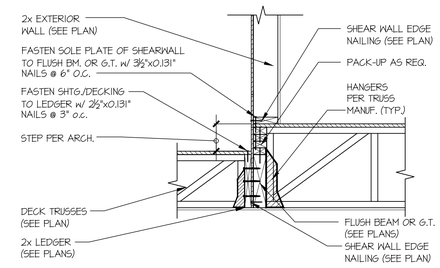
78 TYPICAL SHEAR TRANSFER DETAIL @ EXT. DECK FRAMING

SCALE: 3/4"=1'-0"



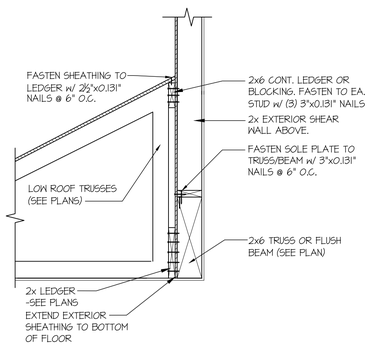
79 TYPICAL SHEAR TRANSFER DETAIL @ EXT. DECK FRAMING

SCALE: 3/4"=1'-0"



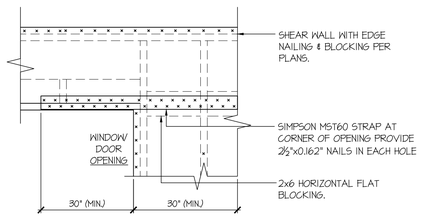
83 SHEAR TRANSFER DETAIL @ EXT. DECK FRAMING

SCALE: 3/4"=1'-0"



88 SECTION

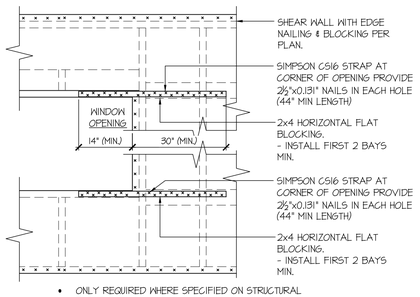
SCALE: 3/4"=1'-0"



- ONLY REQUIRED WHERE SPECIFIED ON STRUCTURAL PLANS

92 EXT. WALL & INT. SHEARWALL OPENING ELEVATION

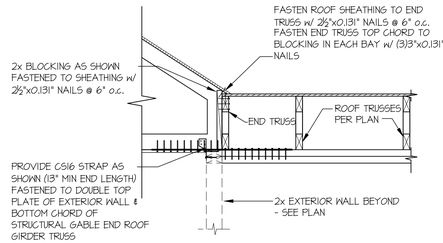
SCALE: NTS



- ONLY REQUIRED WHERE SPECIFIED ON STRUCTURAL PLANS
- IF MIN LENGTH IS NOT PROVIDED RUN STRAP TO END OF WALL

94 EXT. WALL & INT. SHEARWALL OPENING ELEVATION

SCALE: NTS



117 STRAP DETAIL

SCALE: 3/4"=1'-0"

seal:

NICHOLAS J. MARTINETTI
STATE OF WASHINGTON
56478
REGISTERED
PROFESSIONAL ENGINEER

© copyright : MULHERN & KULP
Structural Engineering, Inc.

MULHERN+KULP
RESIDENTIAL STRUCTURAL ENGINEERING
7220 Trade Street, Suite 350, San Diego, CA 92121
p (619) 630-0010 • mulhernkulp.com

M&K project number:
203-22010

project mgr:	NJM
drawn by:	LGH
issue date:	05-27-22

REVISIONS:

date:	initial:
06/20/22 ARCH REVISIONS	LGH

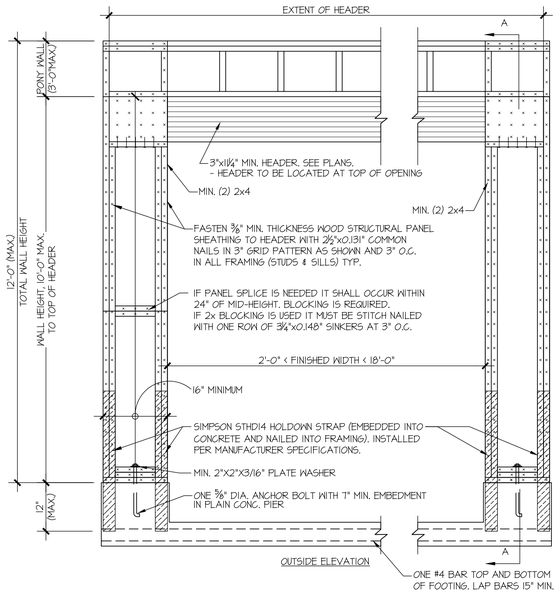
ARCHITECTURAL INNOVATIONS

STRUCTURAL DETAILS

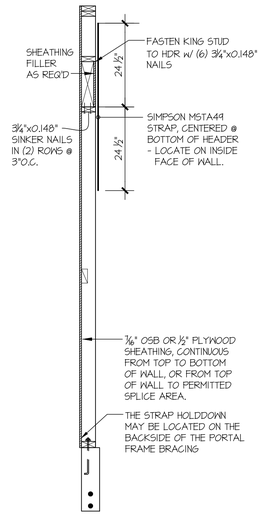
3036 67TH AVE SE
MERCER ISLAND, WASHINGTON

sheet:

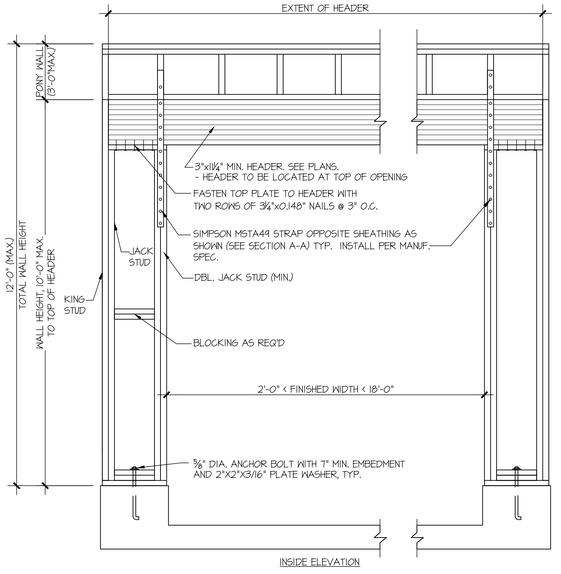
SD-3



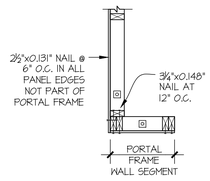
OUTSIDE ELEVATION



SECTION A-A THROUGH PIER



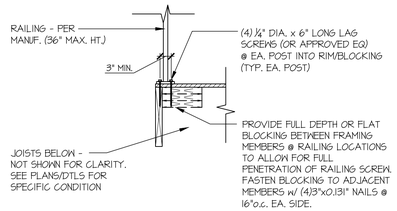
INSIDE ELEVATION



PLAN VIEW OF CORNER DETAIL

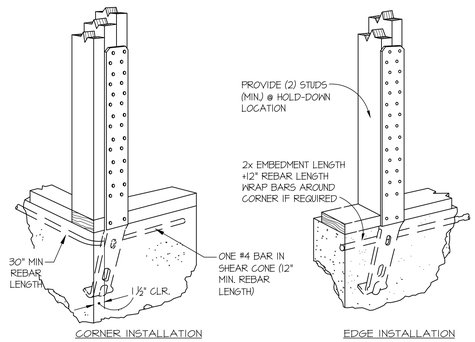
1 APA PORTAL FRAME DETAIL WITH HOLDOWNS

SCALE: N.T.S.



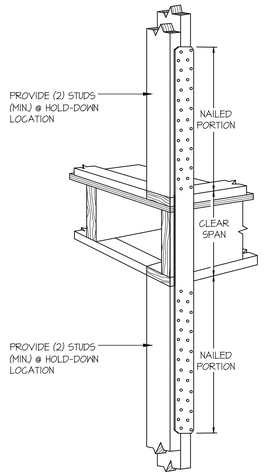
A TYP. RAILING CONNECTION

SCALE: 3/4"=1'-0" — WOOD FRMG BELOW



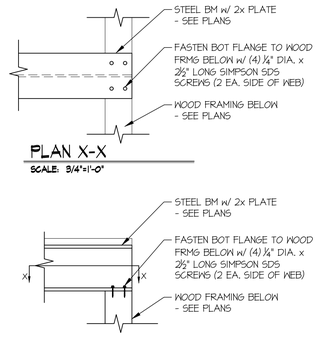
B TYPICAL HOLD-DOWN INSTALLATION

NOT TO SCALE — SIMPSON STHD HD @ FOUNDATION



C TYPICAL HOLD-DOWN INSTALLATION

NOT TO SCALE — SIMPSON STRAP HD @ FLOOR FRAMING



D STL BM TO WOOD FRMG CONNECTION

SCALE: 3/4"=1'-0"

seal:
NICHOLAS J. MARTINGNETTI
STATE OF WASHINGTON
56478
REGISTERED
PROFESSIONAL ENGINEER

© copyright : MULHERN & KULP Structural Engineering, Inc.

MULHERN+KULP
RESIDENTIAL STRUCTURAL ENGINEERING
7220 Trade Street, Suite 350, San Diego, CA 92121
p 619-630-0010 • mulhernkulp.com

M&K project number: 203-22010

project mgr:	NJM
drawn by:	LGH
issue date:	05-27-22

REVISIONS:

date:	initial:
06/20/22 ARCH REVISIONS	LGH

ARCHITECTURAL INNOVATIONS

STRUCTURAL DETAILS

3036 67TH AVE SE
MERCER ISLAND, WASHINGTON

sheet: SD-4